# Fresh Water and Effluents Control in an Integrated (Kraft) Pulp and Paper Mill

K. M. BANTHIA,
N. D. MISRA,
A. K. KAPOOR and
A. VENKATESWAR RAO

*To make paper, water is as important a raw material as cellulose. Inspite of this universal truth, little attention is given to the technology of water supply, its treatment and reconditioning of mill effluents — for reuse in pulp and paper making. In the present paper, authors have touched this new but a very vital subject. The extensive studies made on chemical and physical characteristics of fresh water and effluent waters from different stages of pulp and paper processing, reveal several salient features of the possibilities of reuse of mill effluents in place of fresh water. Although these studies were limited to a particular paper mill, this in no way undermines their importance for pulp and paper technologists in general, because most of the old mills more or less have similar working problems. This is more true to mills situated in tropical countries. Even now, paper mills, having more sophisticated backwater reclamation and closed flow systems, have to face similar water problems, when they think of expansion.*

*Paper machines effluents possess better settling properties and lower contents of T.D.S., total hardness, permanent hardness, methyl orange alkalinity, sulphates and chlorides as compared to those from pulp mill. Obviously reclamation of paper machines effluents by a suitable chemical treatment is much easier and economical, than of the pulp mill effluents. The entire paper machines effluent can be made fit to supplement or replace fresh water demand in certain process operations even with much better advantages over fresh water. Pulp Mill effluents having high contents of organic colouring matter, chlorides and hardness can be partially reconditioned for use in brown-stock preparation, screening and washing: and thereby fresh water can be partially replaced without any adverse effect on the quality of product or the efficiency of a process.*

*There are several novel and findings made by the authors. One of these is the utilisation of effluent sludge from bleach-liquor preparation system. This sludge contains free Cl as well as free $Ca(OH)_2$, besides fine lime mud. These ingredients of bleach sludge can be utilised in treating fresh water or back waters with chlorine as a disinfectant or slimicide; free lime for partial removal of bicarbonate hardness and fine mud as an aid to floculation of turbidity. Another discovery made by them on the chemical activity of coal-cinder in removing carbonate, bicarbonate hardness and oily matter from the mill effluent would prove highly beneficial in better utilisation of this waste product from boiler house. So far cinder has been thrown out as an useless material and has no return value economically Its use as a water conditioning agent would certainly add to the economy of a mill.*

*Three water diagrams showing distribution balance of both fresh and backwaters in different stages of pulp and paper making, give a vivid picture of the water balance for a fresh water flow of either 10 mgd. or 7.5 mgd. or 6 mgd. in an integrated pulp and paper mill producing 100 tons of paper per day on its three paper machines of equal capacity, and having a 5 ton/day rag. plant, a 15 ton/day electrolytic — caustic plant, a 10 Megawatt*

An integrated pulp and paper mill, producing 100 M.T. of paper per day, consumes as much water as a city of 0.3 million population. On an average, to make a ton of paper of printing and writing grades, nearly 60,000 gallons of fresh water is required. When pulp is made from mechanical grinding of wood, water requirement is still higher. Such a large amount of water, required in paper-making, creates many witty problems to the industry. It has to ensure a constant and uninterrupted supply of required volume of water round-the-clock, and throughout the year. The quality of water is to be rigorously maintained in all seasons. Suspended impurities, decayed organic matter, slime, undesirable hardness, turbidity due to mud and colouring matter, and objectionable odours are all such properties of natural waters, that should effectively and economically be removed, before it is made fit for supply to a pulp and paper mill.

For bleached grades of printing and writing papers, following properties of fresh water are desirable (1).

Water from subterranean sources although clear in appearance and free from suspended matter, con-

**K. M. Banthia, Works Manager, Dr. N. D. Misra, Technical Superintendent, A. K. Kapoor and A. Venkateswar Rao, Chemists, Sirpur Paper Mills Ltd., Sirpur, Kakhaznagar, A.P.**

tains varying amounts of dissolved impurities; whereas surface waters contain both suspended and dissolved impurities. During rainy season, surface water gets highly turbid, and paper mills using such water have to spend considerable amount in chemicals and equipment to purify it. Seasonal streams create very severe problem of high turbidity, when there is rain in their catchment area. In some cases, during heavy rains, water from these streams contains as high a turbidity as 75,000 ppm, i.e. for every million gallons of water, 335 tons of mud and suspended solds have also to be handled. These problems compel a pulp and paper technologist to find out ways and means to reduce fresh water demand and to reclaim the mill effluents to make them suitable for resuse in the process.

Hereinbelow, a case study of an integrated pulp and paper mills, having its own power generation plant and electrolytic caustic soda plant, has been described as an example how the problem of water treatment and reuse of effluents can be successfully tackled. These findings are based on the characteristics of water supplied by a small seasonable

*power generation system and a colony of 10,000 persons. Although in the latter two cases of 7.5 mgd. and 6 mgd. flows, substantial reduction in fresh water supply has been suggested, yet the total water balance at each stage of manufacturing process has been maintained same as that in the case with 10 mgd. flow. This is something noteworthy. It would not only give a new line of thought in understanding the specific needs of different processes, so far the use of fresh water and reclamation of mill effluents are concerned, but it would also prove extremely helpful in solving water scarcity for development of paper industry in areas, where either wated is not available in plenty or where due to scarcity of rains, water famine may occur or when future expansion of a mill is at stake for water shortage. It would also help in solving the problem of effluents treatment, and save many paper mills from investing huge sums in treatment of their effluents to overcome health and irrigation hazards as required under state laws.*

rivulet, Peddavagu, a tributory of the River Godavari, from where the Sirpur Paper Mills Ltd. takes its entire water supply. It is in spate whenever there is a heavy rain in its catchment area, which consists of black cotton-soil and lime-stone hills covered with dense forests. On account of this, its water possesses high bicarbonate hardness and equally high methyl orange alkalinity. During rainy season, its turbidity ranges between 5000 ppm and 75,000 ppm and sometimes it shoots upto even 90,000 ppm. In summers and dry season, when total flow in this stream goes as low as 46 cusecs as against 1,77,000 cusecs during high floods, it becomes extremely essential to reclaim mill effluents and use it to meet the water shortage. This gives an ideal case for study of reclaiming mill effluents for reuse.

To meet aforesaid situation, following investigations were made —

i) Chemical Characteristics of fresh water, treated water, turbine cooling water, effluents from pulp mill, paper machines, electro-bleach plant, and soda recovery were seperately studied to find out their basis chemical differences.

ii) Action of mill wastes, like cinder from boiler house, bleach sludge from bleach liquor clarifier and lime sludge from soda recovery plant, on effluents was studied to see if either of them could give a useful reaction in reconditioning any effluent; this study was undertaken to utilise mill waste.

iii) Water distribution, both fresh and back water from process, in different process operations, was studied, to find out possible areas wherein fresh water demand could be supplemented or complimented with virgin backwater or reclaimed effluents from process. In this category, three conditions of water distribution were considered, viz.

a) when plenty of fresh water to the extent of

| Fresh Water Qualities | Fine Papers | Bleached Papers | Unbleached Papers | Ground wood Papers |
|---|---|---|---|---|
| 1. Turbidity ($SiO_2$ ppm) | 10 | 40 | 100 | 50 |
| 2. Colour (Pt. points) | 5 | 25 | 100 | 30 |
| 3. Total hardness (As $CaCO_3$) | 100 | 100 | 200 | 200 |
| 4. Ca — Hardness (As $CaCO_3$) | 50 | — | — | — |
| 5. Methyl orange Alkalinity („) | 75 | 75 | 150 | 150 |
| 6. Fe „ „ | 0.1 | 0.2 | 1.0 | 0.3 |
| 7. Mn „ „ | 0.05 | 0.1 | 0.5 | 0.1 |
| 8. Free $Cl_2$ | 2 | — | — | — |
| 9. Soluble $SiO_2$ | 20 | 50 | 100 | 50 |
| 10. Total Dissolved Solids | 200 | 300 | 500 | 500 |
| 11. Free $CO_2$ | 10 | 10 | 10 | 10 |
| 12. Chlorides | — | 200 | 200 | 75 |

(All figures indicate parts per million)

1,00,000 gallons per ton of paper, is available.

b) when 75,000 gallons of fresh water per ton of paper is available, and

c) when only 60,000 gallons of fresh water per ton of paper would be available.

In all the three cases mentioned above, the basic water requirement in different process operations has not been disturbed. It has been kept at the same level as in the case when 1,00,000 gallons of fresh water would be available per ton of paper, so that the quality of product would not be affected.

**Experimental** — As mentioned above, effluents from different sections of the entire paper mills (including power plant) were analysed to know their average chemical and physical characteristics and variation limits. These tests comprising of fresh water, soda-lime softened water, turbine cooling water, effluents from paper machines house, effluents from pulp mill and from bleach plant separately, have been given in Table I.

Table I gives the comparative characteristics of water and effluents from different sources and process stages. A further study was made to see the effect of waste materials like cinder, and other softening methods on chemical characteristics of effluents, to find out if a suitably easy and economical process could be evolved to recondition mill effluents for reuse.

**1. Use of coal-cinder** = Cinder is a waste product from boiler house, and contains complex inorganic compounds. Due to highly porous structure and partially fused surface, it forms an ideal and cheap filtration media for water and mill effluents. To study its suitability for such purpose, fresh cinder from boiler house was taken and crushed to give ¼" mesh size grains. Crushed cinder was washed free from adhering dust and fines. Different water samples were filtered through this cinder bed, results of which are given in Table No. 2

It was found that the cinder bed had lost its activity slowly, in removing bicarbonate and M-values of the treated samples (samples No. 7, 8, 9, 10, 11, **table II**) as the total quantity of water treated was increased.

**II. Soda-Lime softening**

Samples from both Paper Machine drain and Pulp Mill drain, as described in **Table III,** were softened by cold soda lime process to find out the approximate consumption of chemicals in softening them to various degrees of total hardness.

**III. Use of Bleach Liquor clarifier sludge**

In a continuous bleach preparation plant, sludge from the clarifier tank is constantly discharged to drain This sludge contains both free lime and free chlorine besides fine lime mud. In one case, such sludge was found to contain 3 to 5 gpl of available chlorine. Generally free chlorine loss in sludge comes to 1—1.5% of total chlorine intake. All the three constituents of bleach sludge can be usefully used in water clarification, viz. free chlorine for disinfection of water, free lime for reducing bicarbonate hardness and fine mud as a floculation aid. (2) In view of this, trials were made to see the effect of adding bleach sludge to turbid fresh water, and also paper machine house effluents. Results have been given in Tables No. 4, 5A and 5B. In Table No. 4, settling characteristics of paper machine effluents have been given, when it was allowed to settle as such, and when floculation aid like alum of sodium aluminate or bleach sludge was used.

## OBSERVATIONS AND DISCUSSIONS

**I. Chemical Characteristics**

An analysis of data given in Table No. 1 reveals wide difference between the qualities of effluents from pulp mill and paper machines. Content of chlorides was highest in the pulp mill effluents. Permanent hardness was also much higher in pulp mill effluents than compared to that of paper machines. pH of pulp mill effluents varied between 6.5 to 11, obviously due to varying conditions of operation in different stages of bleaching, extraction and brown stock washing. As observed invariably, in all the samples, a very conspicuous property of pulp mill effluents was its pale yellow to pale brown colour. This colour did not disappear on filtration or on soda-lime treatment. It got removed when an oxidant like potassium permanganate or bleach sludge was added. Action of chlorine (bleach sludge) was slower and less pronounced as compared to that of $KMnO_4$. The latter created floc, which accelerated setling of floculating matter present in the pulp mill effluent, giving better clarity. Depending on the intensity of colour and dissolved organic matter in the effluent, the $KMnO_4$ would vary. In one case, it was found that 1300 lbs. of $KMnO_4$ would be required to completely decolourise 1 million gallons of pulp mill combined effluent.

2) Use of potassium permanganate not only removed the colouring matter of the effluent water, it also helped in reducing the total dissolved solids content considerably. In one case, T.D.S. were reduced from 3100 ppm to 320 ppm while in another case from 2018 ppm to 1540 ppm. When the $KMnO_4$ was added in paper machine effl ent, which was of course not coloured but hasy in appearance, it brought down the T.D.S. content from 1148 ppm to 567 ppm and the sample under test became crystal clear. Quantity of $KMnO_4$ required in this case was only 10 ppm or 100 lbs per million gallon of effluent.

**Table No. I. Characteristics of Mill Effluents, Fresh Water & Softened Water (All values expressed in $CaCO_3$ ppm)**

| Test No. | Source Reference | pH | Total Hardness | Permanent Hardness | Temporary hardness | F-Value | M. Value | Bi-carbonate | Carbonates | Hydrates | Phosphates | Sulphates | Chlorides | Total Dissolved Solids | Remarks |
|---|---|---|---|---|---|---|---|---|---|---|---|---|---|---|---|
| 1 | 2 | 3 | 4 | 5 | 6 | 7 | 8 | 9 | 10 | 11 | 12 | 13 | 14 | 15 | 16 |
| 1. | Combined Effluent from Pulp Mill | 8.5 | 1348 | 1048 | 300 | Nil | 300 | 300 | Nil | — | — | 80 | 1170 | 1560 | Yellowish brown colour. |
| 2. | -do- | 8.5 | 800 | — | — | 50 | 360 | — | — | — | — | — | — | 2018 | 69.1% ash in TDS. |
| 3. | -do- | 11 | 160 | — | — | — | 300 | — | — | — | — | — | — | 3100 | 79% ash in TDS. |
| 4. | -do- | 7 | 1100 | 790 | 310 | Nil | 310 | 310 | Nil | Nil | Nil | 100 | 1020 | 1730 | Brown colour. |
| 5. | -do- | 7 | 1474 | 1340 | 134 | Nil | 134 | 134 | Nil | Nil | Nil | 80 | 1126 | 1280 | Deep yellowish colour. |
| 6. | -do- | 7.5 | 1300 | 970 | 230 | Nil | 230 | 230 | Nil | Nil | Nil | 60 | 1180 | — | |
| 7. | -do- | 7.5 | 84 | Nil | 84 | Nil | 218 | 218 | Nil | Nil | Nil | 20 | 32 | — | Dirty white colour. |
| 8. | -do- | 7.5 | 414 | 4 | 410 | Nil | 410 | 410 | Nil | Nil | Nil | 30 | 398 | 1490 | Yellowish colour. |
| 9. | Unbleached pulp (Screened) Filter | 11 | 72 | Nil | 72 | 200 | 444 | 44 | 400 | Nil | Nil | 20 | 86 | 1570 | Brownish colour. |
| 10. | Bleach Plant Effluent | 6.5 | 104 | — | — | — | 250 | — | — | Nil | — | — | — | 1300 | ) Light yellow colour Con- |
| 11. | -do- | 7.5 | 1868 | 1604 | 264 | Nil | 264 | 264 | Nil | Nil | 30 | 10 | 1040 | 1615 | ) sumed 0.155% $KMnO_4$ |
| 12. | -do- | 7.5 | 1220 | 1064 | 174 | Nil | 174 | 174 | Nil | Nil | 50 | 10 | 1033 | 1063 | ) complete decoloration. |
| 13. | Paper Machine Drain | | | (for decolouration, bleach liquor required was 1.5% as available chlorine). | | | | | | | | | | | |
| | | 8.5 | — | — | — | — | — | — | — | — | — | — | — | 3080 | ) Appearance of Supernat- |
| 14. | -do- | 8.5 | — | — | — | — | — | — | — | — | — | — | — | 1000 | ) ent layer was hazy, but |
| 15. | -do- | 8.5 | 248 | 4 | 244 | 12 | 244 | 220 | 94 | Nil | Nil | 30 | 60 | 1110 | ) on keeping for some time, |
| 16 | -do- | 8.0 | — | — | — | — | — | — | — | — | — | — | — | 6000 | ) it was very clear in all |
| | | | | | | | | | | | | | | | ) these cases from (13) to |
| | | | | | | | | | | | | | | | ) (29). |
| 17. | -do- | 7.0 | 320 | — | — | — | — | — | — | — | — | — | — | 1148 | |
| 18. | -do- | 7.5 | 412 | 228 | 184 | Nil | 184 | 184 | Nil | Nil | Nil | 300 | 88 | 810 | |
| 19. | -do- | 7.5 | 333 | 93 | 240 | Nil | 240 | 240 | Nil | Nil | Nil | 150 | 158 | — | |

| | | | | | | | | | | | | | | | |
|---|---|---|---|---|---|---|---|---|---|---|---|---|---|---|---|
| 20. | -do- | 7.5 | 435 | 337 | 98 | Nil | 98 | — | Nil | — | Nil | — | — | — | |
| 21. | -do- | 7.5 | 340 | 280 | 60 | Nil | 60 | 60 | Nil | Nil | Nil | 380 | 710 | — | |
| 22. | -do- | 7.0 | 630 | 430 | 200 | Nil | 273 | 273 | Nil | — | — | 98 | 350 | 1421 | |
| 23. | -do- | 7. | 660 | 550 | 110 | Nil | 130 | 130 | Nil | — | — | 370 | 134 | 1295 | |
| 24. | -do- | 7.5 | 394 | 270 | 124 | Nil | 130 | 130 | Nil | — | — | 112 | 117 | 1247 | |
| 25. | -do- | 7.5 | 460 | 310 | 150 | Nil | 170 | 170 | Nil | — | — | 122 | 120 | 1330 | |
| 26. | -do- | 7 | 450 | 255 | 195 | Nil | 200 | 200 | Nil | — | — | 144 | 70 | 1280 | |
| 27. | -do- | 7 | 320 | 266 | 164 | Nil | 193 | 193 | Nil | — | — | 73 | 50 | 1500 | |
| 28. | -do- | 7.5 | 300 | 183 | 117 | Nil | 117 | 117 | Nil | — | — | — | 80 | 1240 | |
| 29. | -oo- | 7.5 | 303 | 171 | 132 | Nil | 132 | 132 | Nil | Nil | Nil | — | 71 | 1200 | |
| 30. | Raw Water | 8.5 | 204 | Nil | 204 | Nil | 285 | 285 | Nil | Nil | Nil | 60 | 78 | 430 | |
| 31. | -do- | 8.5 | 199 | Nil | 199 | Nil | 278 | 278 | Nil | Nil | Nil | Nil | 45 | 340 | |
| 32. | -do- | 8.5 | 265 | 85 | 180 | Nil | 180 | 180 | Nil | Nil | Nil | 20 | 32 | 760 | |
| 33. | Lime Softened Softened Water | 11.0 | 10 | Nil | 10 | 70 | 95 | Nil | 50 | 45 | Nil | 20 | 65 | 440 | |
| 34. | -do- | 11.0 | 13 | Nil | 13 | 60 | 90 | Nil | 60 | 50 | Nil | 20 | 34 | 120 | |
| 35. | -do- | 11.0 | 17 | Nil | 17 | 95 | 115 | Nil | 40 | 75 | Nil | 20 | 34 | 130 | |
| 36. | Turbine cooling pond water | 9.5 | 118 | Nil | 118 | 185 | 620 | 450 | 170 | Nil | 10 | 150 | 305 | 350 | ) Average Langlier Index ) + |
| 37. | -do- | 9.5 | 114 | Nil | 114 | 98 | 540 | 344 | 196 | Nil | 10 | 150 | 302 | 290 | ) 3.4 |
| 38. | -do- | 9.5 | 122 | Nil | 122 | 98 | 684 | 468 | 196 | Nil | 10 | 140 | 290 | 140 | |
| 39. | Demineralised (in Ion Exchange Softening Plant) | 11.0 | 0 | 0 | 0 | 67 | 94 | 0 | 54 | 40 | 0 | 20 | 35 | 440 | Raw Water was initially softened by cold soda lime process. |

**Note :-** (1) Sample No. 3 required 130 ppm of $KMnO_4$ to decolourise it completely to crystal clear appearance. Clarified water had 820 ppm of total dissolved solids (T.D.S.).

(2) Sample No. 2 required 32 ppm of $KMnO_4$ to decolourise it to crystal clear appearance. T.D.S. in clarified water was 1540 ppm.

(3) a. Sample No. 17, on treatment with 10 ppm of $KMnO_4$ at room temperature, gave fair clarity (with slight haziness), which disappeared on boiling. T.D.S. content came down to 567 ppm from the initial content of 1148 ppm.

b. Sample 17, on treatment with 10 ppm available chlorine (as bleach sludge) could not get decolourised to the same clarity.

**Table No. 2. Filtration of Effluents through coal-cinder bed (All values indicated in $CaCO_3$ ppm)**

| Test Sample No. | Source Reference | pH | Total Hardness | Permanent hardness | Temporary hardness | P-Value | M. Value | Bi-carbonates | Carbonates | Hydrates | Phosphates | Sulphates | Chlorides | Total Dissolved Solids | Remarks |
|---|---|---|---|---|---|---|---|---|---|---|---|---|---|---|---|
| 1 | 2 | 3 | 4 | 5 | 6 | 7 | 8 | 9 | 10 | 11 | 12 | 13 | 14 | 15 | 16 |
| 1. | Paper Machine Drain (Sample No. 11, Table No. 1) | 8.5 | 310 | 33 | 277 | 6 | 277 | 265 | 12 | Nil | 10 | 60 | 288 | 480 | |
| 2. | -do- (Sample No. 16, Table No. 1) | 8.5 | 346 | 38 | 308 | Nil | 308 | 308 | Nil | Nil | 60 | 10 | 120 | 1400 | |
| 3. | -d-o (Sample No. 18, Table No. 1) | 7.5 | 250 | 20 | 330 | Nil | 350 | 330 | Nil | Nil | Nil | 120 | 200 | — | |
| 4. | -do- (Sample No. 19, Table No. 1) | 8.5 | 224 | Nil | 224 | 16 | 232 | 200 | 32 | Nil | Nil | 120 | 158 | — | |
| 5. | (Sample No. 14, Table No. 1) | 8.5 | 265 | 12 | 253 | Nil | 253 | 253 | Nil | Nil | Nil | 60 | 89 | 350 | |
| 6. | -do- (Sample No. 29, Table No. 1) | 8.5 | 285 | 161 | 124 | Nil | 124 | 124 | Nil | Nil | Nil | — | 66 | 1120 | 12 lit. filtered through 1.5 1. of cinder bed of 6″ depth |
| 7. | -do- (Sample No. 28, Table No. 1) | 10 | 218 | 116 | 102 | 44 | 102 | 14 | 88 | Nil | Nil | — | 78 | 1080 | 8 lit. filtrate, 1.58 of cinder bed. (Langlier Index −0.8). |
| 8. | -do- | 9 | 285 | 175 | 110 | 14 | 110 | 82 | 28 | Nil | Nil | — | 80 | — | 8½ 1. filtrate passed. |
| 9. | -do- (Sample No. 28, Table No. 1) | 8.5 | 288 | 175 | 112 | 10 | 112 | 92 | 20 | Nil | Nil | — | 80 | — | 10 1. filtrate passed. |
| 10. | -do- | 8.5 | 295 | 180 | 115 | 4 | 115 | 107 | 8 | Nil | Nil | — | 80 | — | 11½ 1. filtrate passed. |
| 11. | -do- | 7.5 | 298 | 181 | 117 | Nil | 117 | 117 | Nil | Nil | Nil | — | 80 | — | 13 1. filtrate passed in total. |
| 12. | Combined Effluent from Pulp Mills (Sample No. 1, Table No. 1) | 8.5 | 1236 | 996 | 280 | Nil | 260 | 260 | Nil | Nil | Nil | 60 | 1150 | 1580 | 6 1. filtrate passed through 1.5 1. of cinder bed. Yellow colour slightly reduced. |

| | | | | | | | | | | | | | | | |
|---|---|---|---|---|---|---|---|---|---|---|---|---|---|---|---|
| 13. Combined Effluent from Pulp Mills (Sample No. 1, Table No. 1) | 8.5 | 1335 | 1050 | 285 | Nil | 285 | 285 | Nil | Nil | Nil | 80 | 1160 | — | 12 1. filtrate passed. Yellow colour further faded. |
| 14. Turbine cooling pond water (Sample No. 36 Table No. 1) | 9.5 | 114 | Nil | 114 | 95 | 540 | 344 | 196 | Nil | 10 | 150 | 302 | 320 | (Langlier Index + 3.3) |

**Table III. Cold Soda Lime Softening of Mill Effluents (All values in terms of $CaCO_3$ ppm).**

| Test Sample No. | Source Reference | pH | Total Hardness | Permanent hardness | Temporary hardness | P-Value | M. Value | Bi-carbonate | Carbonates | Hydrates | Phosphates | Sulphates | Chlorides | Total Dissolved Solids | Remarks |
|---|---|---|---|---|---|---|---|---|---|---|---|---|---|---|---|
| 1 | 2 | 3 | 4 | 5 | 6 | 7 | 8 | 9 | 10 | 11 | 12 | 13 | 14 | 15 | 16 |
| 1. | Paper Machine Drain (Test Sample No. 2, Table No. 2, Cinder filtered) | 11 | 10 | Nil | 10 | 194 | 261 | Nil | 134 | 127 | 60 | 10 | 120 | 600 | **Chemical consumption :** (per million gallon) Lime = 2.187 M.T. Soda Ash = 1.543 M.T. |
| 2. | -do- (Test Sample No. 5, Table No. 2, Cinder filtered) | 11 | 24 | Nil | 24 | 110 | 143 | Nil | 76 | 72 | Nil | 10 | 75 | 200 | **Chemical Consumption :** (per million gallon) Lime = 1.91 M.T. Soda Ash = 0.45 M.T. |
| 3. | -do- (Test Sample No. 20, Table No. 1) | 11 | 18 | Nil | 13 | 63 | 153 | — | — | — | — | — | — | — | **Chemical Consumption :** (per million gallon) Lime = 1.59 M.T. Soda Ash = 1.363 M.T. Soda Alum = 0.227 M.T. |
| 4. | -do- (Test Sample No. 21, Table No. 1) | 11 | 25 | Nil | 25 | 122 | 175 | Nil | 108 | 68 | Nil | 200 | 710 | — | **Chemical Consumption :** (per million gallon) Lime = 1.6 M.T. Soda Ash = 1.12 M.T. Sod. Alum = 0.2 M.T. |

| | | | | | | | | | | | | | | |
|---|---|---|---|---|---|---|---|---|---|---|---|---|---|---|
| 5. (Test Sample No. 21, Table No. 1) | 11 | 48 | Nil | 48 | 95 | 178 | Nil | 166 | 12 | Nil | 200 | 710 | — | **Chemical Consumption :** (per million gallon) Lime = 0.92 M.T. Soda Ash = 0.68 M.T. Sod. Alum = 0.2 M.T. |
| 6. -do- (Test Sample No. 21, Table No. 1) | 10 | 96 | Nil | 96 | 32 | 110 | 46 | 64 | Nil | Nil | 910 | 710 | — | **Chemical Consumption :** (per million gallon) Lime = 0.560 M.T. Soda Ash = 0.480 M.T. Soda Alum = 0.2 M.T. |
| 7. Raw Water (Test Sample No. 30, Table No. 1) | 11 | 10 | 0 | 10 | 70 | 95 | 0 | 50 | 45 | 0 | 20 | 65 | 440 | **Chemical Consumption :** (per million gallon) Lime = 1.44 M.T. Soda Ash = 0.0384M.T. |

**Note :** (1) Test sample No. 3, consumed equivalent to 1.125 M.T. of conc. sulphuric acid (96% w/w) per million gallon to bring down the pH from 11 to 5.5.

(2) Langlier Index of effluent samples softened to 96 ppm T.H. (test sample no. 6) comes to + 2.9.

**Table No. IV — Settling Characteristics of Paper Machine Effluent**

| Test Sample No. | Sample Reference | pH | Setting rate in % volume in 15 mts. | 30 mts. | 60 mts. | 120 mts. | Remarks |
|---|---|---|---|---|---|---|---|
| 1. | Paper Machine House Effluent | 8.0 | 62.0 | 70.0 | 71.0 | 71.0 | No aid added. |
| 2. | - do - + 50 ppm alum | 7.5 | 67.0 | 71.0 | 72.0 | 72.0 | |
| 3. | - do - + 50 ppm Sod. Aluminate | 8.5 | 68.0 | 70.0 | 71.0 | 72.0 | |
| 4. | - do - + 100 ppm bleach sludge | 9.0 | 63.0 | 71.0 | 72.0 | 72.0 | |
| 5. | - do - + „ + 50 ppm alum | 8.6 | 68.0 | 70.0 | 72.0 | 72.0 | |
| 6. | - do - + „ + „ + 50 ppm Sod. alum | 9.2 | 68.0 | 71.0 | 71.0 | 72.0 | |
| 7. | - do - + 50 ppm alum + 50 ppm Sod. Alum | 8.0 | 68.0 | 70.0 | 71.0 | 72.0 | |
| 8. | - do - + 100 ppm Bleach Sludge + 50 ppm Sod. Alum | 9.6 | 68.0 | 70.0 | 72.0 | 72.0 | |

**Note :—** Settling rate given above indicates volume of supernatent clear layer as percentage of total volume taken. Use of bleach sludge in clarifying turbid raw water was also studied an described in Table No. 5 (a) and 5 (b)

**Table No. Va. Settling Characteristics of turbid raw water with alum and Bleach Sludge**

| Sl. No. | Settling Time | Test Reference | Alum 25 ppm. Turbidity ppm | Alum 25 ppm. $Cl_2$ ppm | Alum 50 ppm. Turbidity ppm | Alum 50 ppm. $Cl_2$ ppm | Alum 75 ppm Turbidity ppm | Alum 75 ppm $Cl_2$ ppm | Without Alum Turbidity ppm | Without Alum $Cl_2$ ppm | Remarks |
|---|---|---|---|---|---|---|---|---|---|---|---|
| 1. | After 2 hours | Raw Water | 600 | — | 450 | — | 200 | — | 1800 | — | Initial turbidity of raw water was 4000 ppm in all cases. |
| 2. | | „ + 3 ppm $Cl_2$ | 900 | 0.1 | 500 | 0.1 | 300 | 0.1 | 1600 | 0.1 | |
| 3. | | „ + 4 ppm $Cl_2$ | 900 | 0.2 | 450 | 0.2 | 200 | 0.2 | 1500 | 0.2 | |
| 4. | | „ + 5 ppm $Cl_2$ | 800 | 0.3 | 400 | 0.3 | 200 | 0.2 | 1450 | 0.3 | |
| 5. | | „ +10 ppm $Cl_2$ | 700 | 0.5 | 400 | 0.5 | 170 | 0.4 | 1450 | 0.5 | |
| 6. | After 4 hours | Raw water | 400 | — | 300 | — | 60 | — | 1400 | — | -do- |
| 7. | | „ + 3 ppm $Cl_2$ | 600 | Nil | 200 | Nil | 100 | Nil | 800 | Nil | |
| 8. | | „ + 4 ppm $Cl_2$ | 500 | 0.1 | 200 | 0.1 | 90 | 0.1 | 700 | 0.1 | |
| 9. | | „ + 5 ppm $Cl_2$ | 450 | 0.2 | 150 | 0.2 | 90 | 0.2 | 600 | 0.2 | |
| 10. | | „ +10 ppm $Cl_2$ | 400 | 0.4 | 150 | 0.3 | 90 | 0.3 | 600 | 0.4 | |
| 11. | After 6 hours | Raw Water | 190 | — | 120 | — | 20 | — | 400 | — | Initial turbidity of raw water was 4000 ppm in all cases. |
| 12. | | „ + 3 ppm $Cl_2$ | 250 | Nil | 40 | Nil | 20 | Nil | 300 | Nil | |
| 13. | | „ + 4 ppm $Cl_2$ | 200 | Nil | 30 | Nil | 10 | Nil | 250 | Nil | |
| 14. | | „ + 5 ppm $Cl_2$ | 200 | Nil | 20 | 0.1 | 10 | 0.1 | 250 | Nil | |
| 15. | | „ +10 ppm $Cl_2$ | 150 | 0.2 | 20 | 0.2 | 10 | 0.2 | 200 | 0.2 | |
| | | Complete clarity (10 ppm) in water after | 10 hrs. | | 8 hrs. | | 6 hrs. | | 16 hrs. | | |

Note: (1) Figures given above for $Cl_2$ indicate available chlorine in ppm. (taken in the form of bleach sludge).

(2) Bleach sludge composition was :—

Total Solids = 250 gpl.

Avail. $Cl_2$ = 4.0 gpl.

Free $Ca(OH)_2$ = 3.0 gpl.

**Table No. V b.: Settling Characteristics of turbid raw water with alum and bleach Sludge**

| Serial No. | Settling Time | Test Reference | Alum 25 ppm | | Alum 50 ppm | | Alum 75 ppm | | Without Alum | | Remarks |
|---|---|---|---|---|---|---|---|---|---|---|---|
| | | | Turbidity ppm | $Cl_2$ ppm | Turbidity ppm | $Cl_3$ ppm | Turbidity ppm | $Cl_2$ ppm | Turbidity ppm | $Cl_3$ ppm | |
| 1 | 2 | 3 | 4 | 5 | 6 | 7 | 8 | 9 | 10 | 11 | 12 |
| 1. | After 2 hours | Raw Water | 900 | — | 450 | — | 100 | — | 2200 | — | Initial Turbidity of raw water was 4000 ppm to all cases. |
| 2. | | ,, + 3 ppm $Cl_2$ | 1200 | 0.1 | 600 | 0.2 | 200 | 0.2 | 2000 | 0.1 | |
| 3. | | ,, + 4 ppm $Cl_2$ | 1000 | 0.2 | 500 | 0.2 | 170 | 0.2 | 2000 | 0.2 | |
| 4. | | ,, + 5 ppm $Cl_2$ | 1000 | 0.3 | 500 | 0.3 | 150 | 0.3 | 2000 | 0.3 | |
| 5. | | ,, +10 ppm $Cl_3$ | 1000 | 0.6 | 400 | 0.6 | 150 | 0.6 | 2000 | 0.6 | |
| 6. | After 4 hours | Raw Water | 500 | — | 300 | — | 100 | — | 1400 | — | |
| 7. | | ,, + 3 ppm $Cl_2$ | 800 | Nil | 200 | 0.1 | 100 | 0.1 | 1000 | Nil | |
| 8. | | ,, + 4 ppm $Cl_3$ | 600 | 0.3 | 300 | 0.1 | 70 | 0.2 | 1000 | 0.1 | —— do —— |
| 9. | | ,, + 5 ppm $Cl_2$ | 600 | 0.2 | 300 | 0.2 | 50 | 0.2 | 1000 | 0.2 | |
| 10. | | ,, +10 ppm $Cl_3$ | 600 | 0.5 | 300 | 0.5 | 50 | 0.2 | 1000 | 0.5 | |
| | After 6 hours | Raw Water | | | | | | | | | |
| 11. | | | 200 | — | 20 | — | 10 | — | 500 | — | |
| 12. | | ,, + 3 ppm $Cl_2$ | 200 | Nil | 10 | Nil | 10 | Nil | 400 | Nil | |
| 13. | | ,, + 4 ppm $Cl_3$ | 200 | Nil | 10 | Nil | 10 | Nil | 400 | Nil | —— do —— |
| 14. | | ,, + 5 ppm $Cl_2$ | 400 | Nil | 10 | Nil | 10 | 0.1 | 400 | Nil | |
| 15. | | ,, +10 ppm $Cl_3$ | 400 | Nil | 10 | Nil | 10 | 0.4 | 400 | 0.2 | |
| | | Complete clarity (10 ppm) in water after | 12 hrs | | 6 hrs. | | 4 hrs. | | 18 hrs. | | |

Note: (1) To give desired dosage of chlorine in water, bleach sludge of same composition, as in Table No. 5 (a) was used.

(2) Initial turbidity of raw water was 4000 ppm.

To compare settling characteristics of moderately tur bid raw water of 4000 ppm and of clear fresh water of same source, latter was treated with alum and bleach sludge as described in Table No. 6

**Table No. VI. Alum/Bleach Sludge Treatment of Clear fresh river water**

| Sl. No. | Settling Time | Test Reference | Alum 10 ppm. Turbidity ppm | Alum 10 ppm. $Cl_2$ ppm. | Alum 20 ppm Turbidity ppm | Alum 20 ppm $Cl_2$ ppm. | Alum 25 ppm Turbidity ppm | Alum 25 ppm $Cl_2$ ppm. | Without Alum Turbidity ppm | Without Alum $Cl_2$ ppm. |
|---|---|---|---|---|---|---|---|---|---|---|
| 1. | After 2 hours | Fresh Water (10 ppm) | — | — | — | — | — | — | 10 | — |
| 2. | | ,, ,, + 3 ppm $Cl_2$ | Hazy | 0.1 | Fast Settling | 0.1 | Fast Settling | 0.1 | Hazy | 0.1 |
| 3. | | ,, ,, + 4 ppm $Cl_2$ | Hazy | 0.3 | Fast Settling | 0.2 | Fast Settling | 0.2 | Less hazy | 0.2 |
| 4. | | ,, ,, + 5 ppm $Cl_2$ | Hazy | 0.3 | Fast Settling | 0.3 | Fast Settling | 0.3 | Clear | 0.3 |
| 5. | | ,, ,, +10 ppm $Cl_2$ | Clear | 0.7 | Fast settling | 0.7 | Fast settling | 0.7 | Clearer | 0.7 |
| | | Sample was crystal clear after | 4 hrs. | | 3hrs. | | 3hrs. | | 6hrs. | |
| 6. | After 4 hours | Fresh Water + 3 ppm $Cl_2$ | Clear | Nil | Clear | Nil | Clear | Nil | Milky | Nil |
| 7. | | ,, + 4 ppm $Cl_2$ | Clear | Nil | Clear | Nil | Clear | Nil | Clear | 0.1 |
| 8. | | ,, + 5 ppm $Cl_2$ | Clear | 0.1 | Clear | 0.1 | Clear | 0.1 | Clear | 0.2 |
| 9. | | ,, + 10 ppm $Cl_2$ | Clear | 0.5 | Clear | 0.6 | Clear | 0.6 | Clear | 0.6 |
| 10. | After 6 hours | Fresh Water + 3 ppm $Cl_2$ | — | — | — | — | — | — | Clear | Nil |
| 11. | | ,, + 4 ppm $Cl_2$ | — | — | — | — | — | — | Clear | Nil |
| 12. | | ,, + 5 ppm $Cl_2$ | — | — | — | — | — | — | Clear | 0.1 |
| 13. | | ,, +10 ppm $Cl_2$ | — | — | — | — | — | — | Clear | 0.5 |

Note (1) On addition of bleach sludge, the pH of water increased from 7.6 to 7.9.

(2) Use of organic floculant like glue or modified gums like Flocal (I. G. I.) along with addition of sludge improved up-on floc formation properties.

(3) With addition of 75 ppm of alum in fresh water, floc formation was found to be verymuch enhanced.

(4) Concentration of $Cl_2$ in ppm given above is as available chlorine (in bleach sludge).

(5) Composition of bleach sludge was same as used in Table No. 5 (a).

3) Compared to paper machines effluents, pulp mill effluents invariably contained much higher total hardness, permanent hardness, temporary hardness, methyl orange alkalinity and total chlorides (Table No. 1 test samples nos. 1 to 12).

4) As compared to fresh water, paper machines effluents contained more of sulphates, chlorides and permanent hardness. Its settling properties were found to be excellently quick settling, when in most of the cases the supernatent layer was crystal clear (Table No. 1, test samples nos. 13 to 29). Sulphates content was higher than in the pulp mills effluent, but this varied from sample to sample from 30 ppm to 380 ppm partly due to varying alum consumption in stock preparation and partly for fluctuations in fresh water valume used over paper machines and backwater system.

5) Except a few stray cases, carbonates content in both pulp mill effluents and paper machine effluents was found to be absent.

**II. Softening Action**

1) When cinder was used as a filtration media for either of the effluents, it was found to possess remarkable chemical activity in effecting the P & M values of filtered water samples. Even temporary and permanent hardness was also effected. No effect was however found to be on chlorides (Table No. 2), which remained unchanged before and after filtration.

2) In case of paper machines effluents, filtration through cinder bed helped in reducing the bicarbonates considerably from 117 ppm. (Table No. 1, test sample No. 28) to 14 ppm (Table No. 2, Test Sample No. 7), when total volume of paper machine effluent filtered was four times the volume of cinder bed. Activity of cinder slowly fell, as more effluent water was passed through it, which come to a stop when nearly 15 volumes of water was passed.

3) Cinder also appeared to have some effect in reducing total dissolved solids from the effluents samples (Table No. 1, Test Sample No. 2 and Table No. 2, Test Sample No. 7).

4) Paper Machines effluents could be softened by cold soda lime method to any desired hardness level. Nearly 1.44 M.T. of lime and 38.4 Kg. of Soda Ash was required in softening raw water to a total hardness of 10 ppm. (from an initial hardness of 204 ppm). (Table No. 3, Test Sample No. 7). Since permanent hardness in paper machines effluents was invariably high (table No. 1, Test Samples No. 11 and 29), quantity of soda ash required to soften these samples to zero hardness would also be quite appreciable.

5) After softening treatment, paper machine-house effluent water was crystal clear, colourless and low in T.D.S. content. (Table No. 3, Test Samples No. 1 & 2). Foaming tendency was very much less than that of the parent samples. This was mostly due to traces of detergents and soaps present in the effluent. Foaming tendency could be overcome completely by reducing the pH from 11 to 7 and below by means of acid addition.
Chlorides and sulphates remained more or less unchanged after softening.

6) In removing nearly 244 ppm of total hardness (from 340 ppm to 96 ppm) (test sample No. 6, Table No. 3) from a paper machine effluent sample, nearly 0.56 M.T. of lime, 0.48 M.T. of soda ash and 0.2 M.T. of sodium aluminate was required for every million gallon of effluent treated. This would give a softening cost of Rs. 610/- per million gallon, when costing is taken at Rs. 100/- per ton of lime, Rs. 500/- per ton of soda ash and Rs. 1600/- per ton of sodium aluminate.

7) Langelier Index, which indicates scaling tendencies of a water sample, of turbine — cooling pond water was found to be around + 3.4 in one case (Table No. 1, Test Sample No. 37, 38 and 39). When same samples were filtered once through a cinder bed, the Langelier Index came down to + 3.3 (Table No. 2, Test Sample No. 14).

8) Paper Machines effluent sample after being softened by cold soda lime process to a moderate hardness of 96 ppm (Table No. 3, Test Sample No. 6), showed a Langelier Index of +2.8; whereas the same sample on being filtered once through cinder bed, possessed the Langelier Index of — 0.8 (Table No. 2, Item No. 7).

**III. MISCELLANEOUS OTHER RECONDITIONING TREATMENTS**

1) Effluents from paper machines and stock preparation house, possess good settling properties as indicated in Table No. 4 when 70 per cent of it got clarified in half an hour. Keeping further for 1 and 2 hours only improved further clarity by 1.0 per cent.

2) Settling rate of paper machines effluents could be enhanced by addition of 50 ppm of alum (test sample No. 2, Table No 4), when in 15 minutes the rate increased to 67 per cent as against 62 per cent of the original effluent.

3) Addition of bleach sludge alone did not show much improvement in settling rate (Table No. 4, Test Sample No. 4), but it did not cause any untoward effect in settling.

4) Sodium Aluminate showed practically same effect as that by alum alone and no significant change was observed (Table No. 4, Test Sample No. 3).

5) Combination of bleach sludge with alum or sodium aluminate (Table No. 4, Test Samples from 5 to 8), was found quite palatable, and no untowar deffect was observed, although both possess different pH characteristics.

6) A sample of river water, having initial turbidity of 4000 ppm on keeping for 2, 4 and 6 hours produced a clarified supernatent layer of 1800 ppm, 1400 ppm and 400 ppm respectively (Table No. 5 (a). Another sample of same turbidity showed slightly higher turbidity of 2200, 1400 and 500 ppm under similar conditions (Table No. 5b).

7) When bleach sludge was added to river water sample (of 4000 ppm initial turbidity), floculation characteristics improved. In case of Table 5 (a), an addition of 3 ppm of bleach sludge (as avail. $Cl_2$) improved the settling characteristics by 25 to 40 per cent (Table No. 5 (a), Tests No. 2, 7 and 12).

Addition of 5 ppm of bleach sludge (as avail. $Cl_2$) showed better floculating properties, but further addition of 10 ppm of bleach sludge did not show any further improvement in settling.

8) Stability of chlorine in water for different periods of settling was worth noting (Table No. 5 (a) & (b). An initial dose of 5 ppm of chlorine would leave only 0.2 ppm free $Cl_2$ after 4 hours of hold-up and 0.3 ppm after 2 hours of hold-up.

9) When addition of bleach sludge was supplemented with alum, floculation characteristics of turbid fresh water improved much. Highest clarity of 10 ppm could be achieved when 75 ppm of alum and 4 ppm of bleach sludge were allowed to act for 6 hours (Table No. 5 (a), Test Sample No. 13). In another case (Table No. 5 (b) this could be achieved only with 3 ppm of bleach sludge mixed with 75 ppm of alum.

10) A fairly low turbidity of 30 ppm could be achieved with

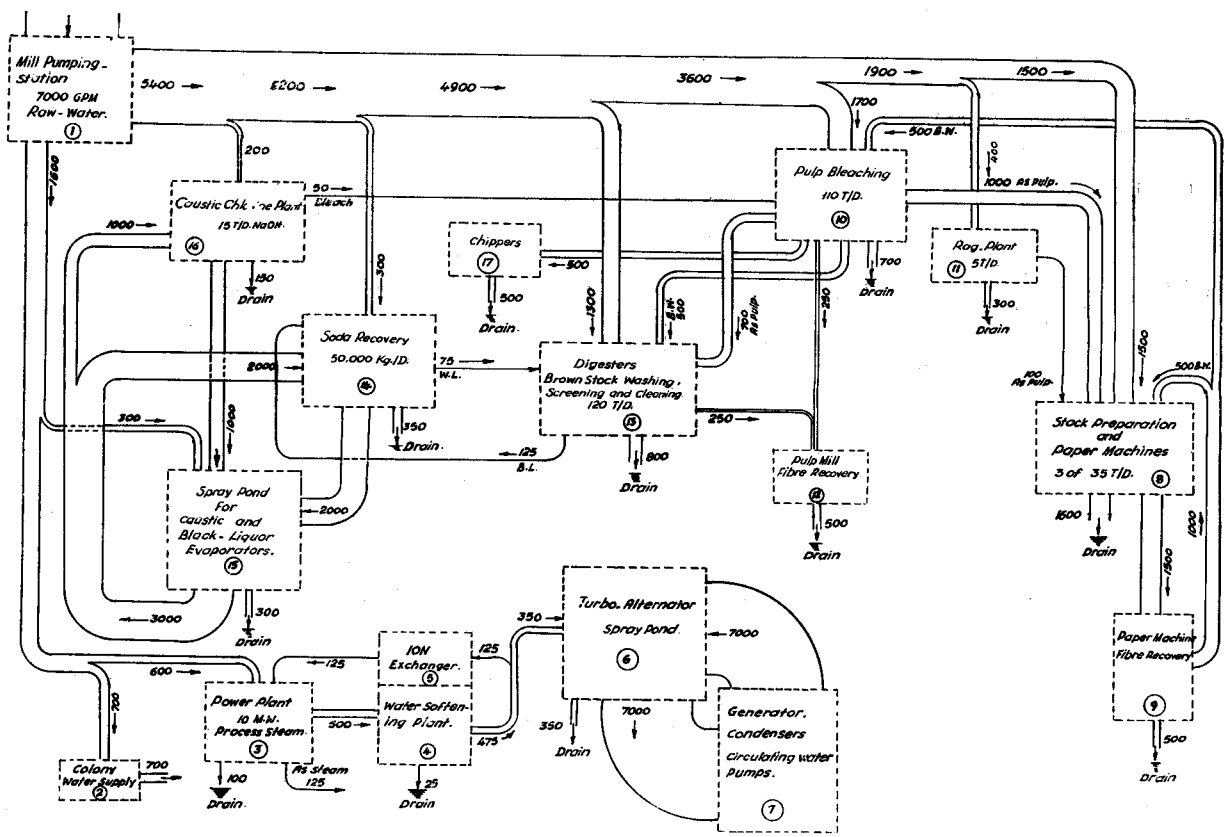


**Fig. 1. Water diagram for 100 T/D Integrated Pulp and Paper Mills. Flow distribution and balance for 100,000 gallons fresh water supply per ton of paper.**

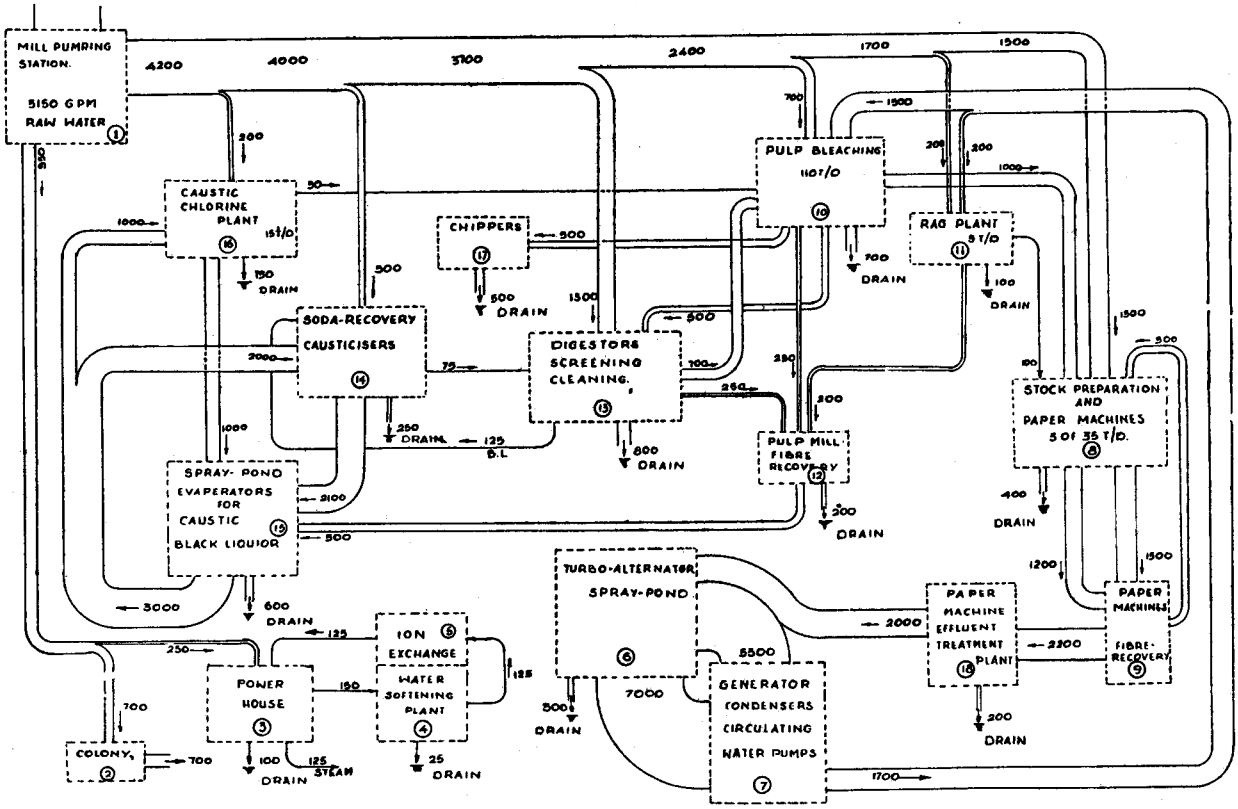


**Fig. 2. Water diagram for 1007 T/D Integrated Pulp & Paper Mills. Flow distribution and balance for 75,000 gallons fresh water supply per ton of paper.**

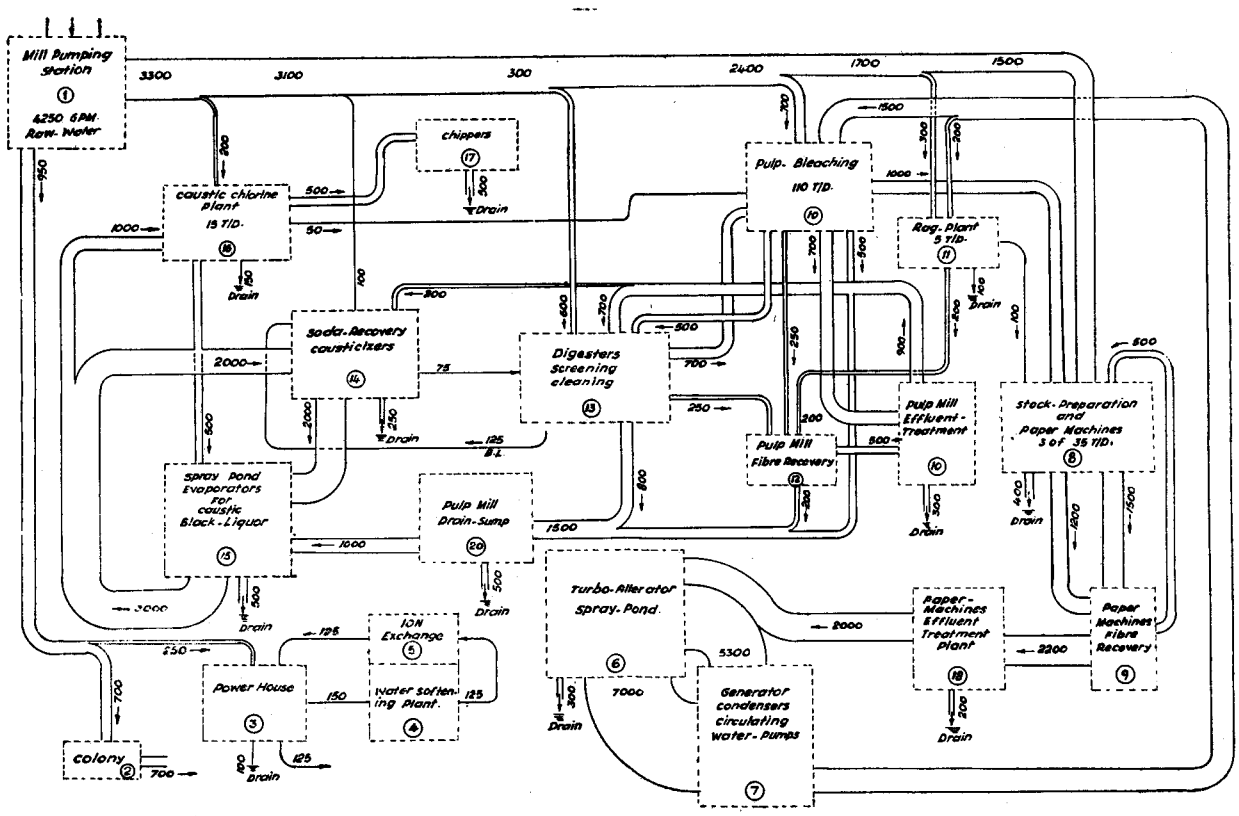


**Fig. 3. Water diagram for 100 T/D. Integrated Pulp and Paper Mills. Flow distribution and balance for 60,000 gallons fresh water supply per ton paper.**

50 ppm of alum and 4 ppm of bleach sludge in 6 hours (Table No. 5 (a), Test Sample No. 13). In another set of tests under similar conditions turbidity of clarified water was only 20 ppm (Table No. 5 (b), Test Sample No. 11).

11) Complete settling, when clarified layer of water possessed only a turbidity of less than 10 ppm was possible on keeping for 10 hours, 8 hours and 6 hours with 25 ppm, 50 ppm and 75 ppm of alum respectively, as against 26 hours when no alum was added (Table No. 5 (a). In the other set of trials (Table No. 5 (b), more or less similar observations were found.

12) In another set of tests, effect of addition of bleach sludge alone or mixed with alum in clear fresh water (of turbidity less than 10 ppm) was studied (Table No. 6). It was found that with a settling time of 4 hours, with bleach sludge addition in concentration from 3 ppm to 10 ppm, clear water could be obtained with or without addition of alum (Table No. 6, Test No. 6 to 9). Addition of alum further improved the clarity.

13) In case of clear water, an initial dosing of 5 ppm of free Cl (as bleach sludge) gave a residual free Cl, of 0.3 ppm after 2 hours of keeping and 0.1 ppm after 4 hours.

14) In case of a hold up time of 6 hours for settling, a 5 ppm of bleach sludge gave 0.1 ppm of residual Cl. when no alum was used (Table No. 6, Test No. 12) and 10 ppm addition gave 0.5 ppm residual Cl. (Test No. 13).

## IV. WATER DISTRIBUTION IN PROCESS RECLAMATION

A self-contained integrated pulp and paper mill producing 100 M.T. of bleached paper per day on three paper machines each of 35 M.T./day capacity, and having a 5 M.T./day rag plant, a 10 Megawatt power plant and a 15 M.T./day electrolytic caustic soda plant, would consume nearly 7000 gallons per minute (or 10 million gallon per day) of fresh water. This much of fresh water supply would give a liberal quantity to all process stages including the workmen's colony. By adopting judicious control on wastage of fresh water and improved reuse of backwater, this consumption could further be reduced to 5,150 gpm (i.e. 7.5 mgd) or even to 4,250 gpm (i.e. 6 mgd). How this could be achieved and in each case what should be the balanced distribution of fresh water and backwater in process, has been described below and graphically presented in the three diagrams **(Fig. 1, 2 and 3).**

1) In Fig. No. 1, a tentative flow of 7,000 gpm or 10 mgd of fresh water to different process stages has been given, and also the quantity of backwater used in process has been described. Seventeen areas have been mentioned, like the colony, steam and power generation. E. B. Plant, Soda Recovery Plant, Pulp Mill comprising of chipper house, digester house, brown stock washing and screening, bleaching stock preparation and paper machines, rag plant of 5 M.T./day capacity, water softening plant, fibre recovery and effluent reclaimation units. Distribution balance covers a supply of 1,00,000 gallons of fresh water per ton of finished paper.

Some glaring points of distribution of water in this scheme are as follows:—

a) 700 gpm of fresh water is given to workmen colony (Area No. 2), comprising of 10,000 inhabitants for their domestic and gardening purposes. In tropical countries, a supply of 100 gallons of water per man per day is quite a liberal quantity and would be sufficient to amply meet the growing demand of future.

b) To stock preparation and paper machines (area no. 8) consisting of 3 machines each of 35 M.T./day capacity, 1500 gpm of fresh water is given. This would give 21,600 gallons fresh water per ton of paper for 100 tons of finished paper per day, as make up out of a total intake of 3100 gpm of water in the system. In this water balance, nearly 1600 gpm of effluents is allowed to go to drain unrecovered. Out of 1500 gpm going to fibre recovery system (area no. 9) as back water, only 1000 gpm has been recovered to be recycled back in the process.

c) To pulp mill (Areas No. 10, 11, 12, 13 and 17) total fresh water supply given is 3,400 gpm (or nearly 47,000 gallons of fresh water per ton of pulp) as against a total inflow of 4,025 gpm (or nearly 59,000 gallons per ton of pulp). This gives practically 84 per cent of the total water handled in pulp making in the form of fresh water.

d) 600 gpm (or 0.8 mgd) of fresh water has been allotted to power plant and boiler house (Areas 3, 4, 5, 6 & 7) as makeup to boilers and turbogenerators cooling system.

e) To Soda recovery unit (Areas No. 14 & 15), handling nearly 50,000 kg. of soda alkali/day, 600 gpm of fresh water is allotted to meet the demand of causticization, recovery boiler make up and evaporators cooling of both soda recovery and electrolytic caustic soda plant.

f) In this water balance, since fresh water supply to each

section has been allotted in plenty, no recovery of backwater or effluents has been provided, except the backwater that is recycled in the process in normal course.

2. a) In Figure No. 2, the water balance for same production capacity has been given with a total fresh water supply of 5150 gpm or 7.5 mgd only. In this case, although fresh water supply has been reduced by 25 per cent, the individual fresh water consumption in paper machines and stock preparation, brown stock washing and screening and power plant has been kept at the same level as in the previous case.

b) The reduction by 1850 gpm of fresh water has been achieved by reducing fresh water supply to bleachery (Area No. 10) by 1000 gpm (from 1700 gpm to 700 gpm), to power plant (Area No. 3, 4, 5, 6 and 7) by 350 gpm (from 600 gpm to 250 gpm) to Rag Plant (Area No. 11) by 200 gpm (from 400 gpm to 200 gpm); and cutting down 300 gpm supply to area No. 15 spray ponds altogether.

c) As given in above paragraph, the reduced fresh water supply to bleachery, power plants and rag plants has been supplemented with the reclaimed water from paper machines effluent treatment plant (Area No. 18), which will be suitably softened by soda-lime process.

d) Elimination of 300 gpm of fresh water to area No. 15 has been replaced by backwater from pulp mill fibre recovery unit (Area No. 12), which can be used as cooling water for evaporators.

e) A noteworthy arrangement in this water diagram (figure No. 2) is the provision of a Treatment plant (Area No. 13) for paper machines effluent. This plant may consist of a preliminary stage of filtration through cinder bed, and a secondary stage of softening treatment by soda lime method to produce partially softened and clarified water appraoching to the quality of fresh water. Such a reclaimed effluent will be suitable for safe use in turbine cooling and pulp bleachery. By this way, 2000 gpm of effluent can be made suitable for reuse in place of fresh water, without bringing any adverse effect in any process operation or the quality of product. The cost of softening of 2200 gpm of paper machines effluent to 95 ppm total hardness level will come to around Rs. 1000/- per day or 31 5 P. per 1000 gallons.

3. a) In figure No. 3, a water balance diagram with only 4250 gpm of fresh water intake has been described, thereby cutting down the fresh water supply to only 60000 gallons per ton of paper. For the type of paper mill described in this paper, a fresh water consumption of 60000 gallons per ton of paper is an ideal figure. Again, as in previous case, the total water supply to different areas of the mills has been kept same as in Figure No. 1.

b) The fresh water cut by 2750 gpm (from 7000 gpm to 4250 gpm) has been achieved by supplementing fresh water demand with 2000 gpm of reclaimed effluent from paper machines (Area No. 18) as suggested in Figuer No. 2, and the additional quantity of 9000 gpm from reclaimed pulp mill effluents (Area No. 19). In the latter case, the reclaimed pulp mill effluent would be used exclusively in brown stock washing and screening, where initial pale or pale brown colour of the effluent will not affect the quality of pulp.

c) Reclaimation of pulp mill effluent may involve filtration through cinder bed and treatment with a suitable oxidant like bleach sludge or potassium permanganate or some other more effective but economical, chemical so that the reclaimed water is crystal clear and devoid of any harmful properties.

d) In this diagram, another special feature is the provision of Area No. 20, a common drain sump for pulp mill effluents. Such a sump could be used for diverting all pulp mill drain to it through a fibre recovery decker. This would help in total recovery of all sorts of cooked, uncooked and semi cooked fibre present in drains of chipper house and pulp mill.

## CONCLUSIONS

Although the present studies were limited to investigating chemical and physical characteristics of water used and effluents discharged from different stages of processing pulp, paper, bleach liquor and steam in a particular integrated pulp and paper mill, employing Kraft process, it gives us a fair idea how best the effluent can be reclaimed for reuse as such or as a substitute for fresh water.

Almost all paper mills having basically similar set up, face the water problem very much akin to what is described here in this paper. These findings reveal certain basic difference in the characteristics of effluent from various process stages and can be summarised briefly as below.

1) Effluents from stock preparation and paper machines house possess excellent settling properties. Their other chemical properties like chlorides content, total hardness, permanent hardness and total dissolved solids (T.D.S.) are much lower than those present in pulp mill effluents. Besides this, there

is no colouring matter present in paper machines effluent except when deep dyed and pigmented paper is made, which is invariably found in the pulp mill effluents due to presence of soluble lignin compounds, and to remove the same, use of an oxidant is necessary.

2) Settling properties of paper machines effluents can be improved by adding a floculation aid like alum or sodium aluminate in suitable amount.

3) Coal cinder, which is a waste product from boiler house was found to possess excellent property of removing permanent and temporary hardness from paper machines effluents while filtering through its bed. This activity of cinder was found to be limited only. It could remove nearly 23 per cent of total hardness and 16—17 per cent of bicarbonate hardness when 6 volumes of water was filtered through its bed. Beyond 6 volumes, the activity of cinder gradually fell till it came to a halt after filtering 15 volumes of effluents.

This property of cinder could be advantageously used with a view to utilise a waste product on one hand and to reduce treating chemicals demand on the other, when paper machines effluent is to be reclaimed to supplement fresh water demand in a mill.

4) Cinder worked very well in filtering paper machines effluents to crystal clear filtrate, and in this process all grease and lubricating oils present in effluents, also got removed by being absorbed in porous cinder particles. Thus the use of cinder would give triple advantage, first as filter media, secondly as an aid in partial softening of water and thirdly as a means to remove grease and oils present in effluents.

5) Since paper machines effluents have better settling properties and possess much lower bicarbonate and permanent hardness compared to those in pulp mill effluents, the former can be more economically softened by conventional soda-lime process to any desired hardness level, and make it suitable to substitute fresh water in certain processes like its use in turbine — condenser cooling, in bleach preparation and in brown stock washing.

6) Pulp Mill effluents contain organic colouring compounds and a suitable oxidant is required to remove such coloured organic matter. For this purpose, potassium permanganate in slightly acidic medium (pH 5-6), was found to work very effectively. Potassium Permanganate not only removed the colouring matter, but also helped considerably in reducing the T.D.S. content which got settled in the form of floc created by $KMnO_4$.

Use of bleach sludge as an oxidant was found effective, but its action was slow. It was found to take 8 to 12 hrs. to remove all colouring matter at room temperature.

7) A pulp mill effluent, reclaimed by $KMnO_4$ oxidation and filtration through cinder bed. still possesses high content of hardness, T.D.S. and chlorides. After softening with soda lime, although hardness and T.D.S. could be suitably reduced, the chlorides contents were not reduced. As such, even after softening, pulp mill effluents cannot be used to replace or supplement fresh water demand in process. In view of the above, the pulp mill effluents need the treatment of only oxidation for discolouration and filtration to remove all suspended solids, after which the treated and clarified water can be used safely as cooling water in Soda Recovery evaporators and in brown stock washing and screening system.

8) Bleach sludge, which is another waste product from bleach preparation plant, can be usefully employed as a source of chlorine and lime in fresh water treatment process. Free chlorine present in sludge would give sufficient chlorine dosing in fresh water to kill algae, slime and bacterial infection; while the free $Ca(OH)_2$ would reduce bicarbonate hardness. Fine mud present in sludge would help in improving floculation rate of raw turbid water. Thus triple advantage of using bleach sludge could be achieved in bringing economy in water treatment process.

9) Bleach sludge, although alkaline due to free $Ca(OH)_2$. it is compatible with alum or sodium aluminate in clarification or turbid raw water. It could even be used in treating paper machine backwater to kill slime growth in backwater system.

10) Water distribution, reuse of backwater, effluents generated from each stage, and the quantity of fresh water required as makeup in different stages of process operation of a pulp and paper mill were all drawn in diagramatic representation, as shown in the three water diagrams figures 1, 2 & 3. These diagrams present a flow balance of both fresh water and effluent in all major sections of an integrated pulp and paper mill producing 100 M.T./day or paper including the supply of fresh water to workmen's colony.

a) In figure No. 1, water distribution and balance has been given when fresh water supply is available at the rate of 7000 gpm or 1,00,000 gallons per ton of paper. In this case, no reclaimation of effluents is necessary, except the reuse of backwater in process which is normally made. Plenty of fresh water has been made available to all sections to maintain quality of product at its best.

b) In the second case, fig. no. 2, although fresh water supply was reduced from 7000 gpm to 5150 gpm, i.e. @ 75,000 gallons per ton of paper, the water balance in all the sections has been maintained same, and at no stage fresh water supply has been cut or reduced. The reduction by 1850 gpm of fresh water has been made up by reclaiming 2000 gpm of paper machine effluent by a combined cinder bed filtration and soda lime softening process. Out of the 2000 gpm of reclaimed water, 1700 gpm has been diverted to pulp bleachery to replace 1500 gpm of fresh water there and 200 gpm in rag plant. Since the 2000 gpm of reclaimed water would go to these plants via turbine cooling system, it will attain certain temperature. Higher temperature and lower hardness in this water would certainly prove more beneficial in improving the quality of washed pulp both in rag plant and bleach plant. Cost of reclaimation of 2200 gpm of paper machine effluents to a moderate hardness of 96 ppm may come to around Rs. 1000 per day or 31.5 paise per 1000 gallons. This water will have comparatively lesser scale forming tendencies as indicated by its lower Langelier Index of + 2.9, and it will also give better performance in washing of pulp during bleaching because its calcium content will be within ideal limits.

Thus it is possible to bring about a 25 per cent reduction in fresh water supply, from 7000 gpm to 5150 gpm without reducing the demand of initial fresh water or near to fresh water recovered from paper machine effluents, in various processes of making pulp, paper, steam, bleach and soda recovery for 100 tons paper /day. It should be noted that so far economy in cost is concerned, it may not be possible to bring about substantial reduction in total cost of water supply, since the cost of recovery 2200 gpm of backwater comes to nearly same as that of generating 1850 gpm of raw water from river.

c) In another case, figure no. 3, water distribution to different process stages for same production and capacity, has been given for a fresh water intake of only 4250 gpm (as against 7000 gpm in first case). This reduction by 40 per cent in fresh water supply has been made up with the recovery of 2000 gpm of reclaimed paper machines effluents (as in Fig. No. 2) and installing a Pulp mill effluents treatment plant (Area No. 19). Treatment of pulp mill effluents at this stage will be only with using a suitable oxidising agent (like bleach sludge or potassium permanganate) to remove organic colouring matter from the effluents and subsequently to filter it through cinder bed to remove suspended solids from it. So obtained clarified water can be reclaimed to the extent of 900 gpm for reuse in washing, screening and similar jobs in brown pulp preparation plant of a pulp mill. Total water balance in circulation has been somewhat it was shown in Fig. No. 1.

Another important feature in this proposal (Fig. No 3) is the provision of a common drain sump (Area No. 20) for all pulp mill effluents including the chipper house. Since there is always some sort of raw or cooked fibre and fines from chipper house, screening section and washing system all of this can be recovered from the common sump by installing suitable deckers over it. Thus whatever raw or cooked fibre goes to drain in pulp mill can be recovered and utilised in making mill boards.

**ACKNOWLEDGEMENTS**

Authors are highly thankful to Shri I. M. Bhandari, Vice President of the Sirpur Paper Mills Ltd., Sirpur-Kaghaznagar (A.P.) in extending full facilities to carry out these investigations and studies in the Research and Process Control Laboratories of the Mills.

**REFERENCES**

(1) a. TAPPI Monograph No. 18, 'Water Technology in the Pulp & Paper Industry 1957);

b. INDIAN PULP & PAPER —7, No. 1, 105, 107, 109, 110 (July 1952) Amritlal

(2) INDIAN PULP & PAPER — XXII, No. 7, January, 1968 Misra & Padma Rao

"Flocculated silt as water clarification aid".