Improved Yield at the West Coast Paper Mills

N. R. Jangalgi, M. B. Jauhari, R. D. Agarwal, N. S. Jaspal, and Roshan L. Bhargava.

An intensive and extensive effort has been made at the West Coast Paper Mills to obtain more paper from given raw-materials. A good deal of economics of any mill depend on the efficient use of the raw-materials. This paper, reveals as to how the economy has been effected by the efficient use of raw-materials. It is indicated that a saving of Rs. 26.9 lacs per annum can be made, the cost of bamboo at the mill site being Rs. 125 per tonne.

The paper describes the improvements made in measuring accurately the quantity of incoming bamboo using statistical techniques, stacking, and avoiding decay etc., and more particularly the chipping operation where the dust loss has been minimised and the quality of chips has been improved.

The present paper also describes the rationalisation of use of bamboo dust. The portion of dust which contains the highest proportion of silica, i.e. approx. 18 to 20 percent, is rejected and used for burning in the boiler and the remaining dust which contains on an average approximately 6 to 8 percent ash is used for pulping. The paper shows that the pulp obtained out of dust is not in any way inferior to that of bamboo pulp. It has been suggested that the cooking of dust is to be separately done in separate digester, the arrangements for which are being considered. This will ensure uniform cooking in the digester where mixture of dust and bamboo are cooked.

INTRODUCTION

The present overall ratio of AD bamboo to finished paper in our mill is between 2.1 to 2.2.

It would be worth-while indicating here that on account of circumstances peculiar to the West Coast Paper Mills the permanganate number of the pulp must be raised in such a fashion that less than 1.4 tonnes of black liquor solids are obtained per tonne of pulp. This was to maintain the capacity of the existing recovery plant and at the same time to increase the production of pulp and paper. The efforts were directed towards raising the permanganate number and it was found that the increase in unbleached screened yield of pulp was raised from 42/43 to 50 per cent and above and the bleached pulp yield from 38 to 46 per cent. This has helped in retaining the hemicellulose resulting in better quality and quantity of pulp. The machine speeds were consequently increased on account of higher strength of pulp and this has helped in reducing the cost of production by loading paper with more fillers.

N. R. Jangalgi, Senior Chemist, Lic. techn. M. B. Jauhari, Research Chemist, R. D. Agarwal. Pulp Mill Incharge, N. S. Jaspal, Chief Chemist — The West Coast Paper Mills Ltd.

Dr. Roshan L. Bhargava, General Manager, The West Coast Paper Mills Ltd. and the Andhra Pradesh Paper Mills Ltd.

The bamboo constitutes one of the main raw materials for paper making in our country. Due to its availability, all over the country and its versatility, it is one of the best cellulosic raw materials available in the country. As envisaged in the plan, the pulp and paper production is rapidly increasing. This has resulted in an acute shortage of this raw material. It is therefore, essential that every effort should be made to reduce the losses at all stages of pulp and papermaking, as well as improving the yield of paper per tonne of bamboo used.

Intensive work is being carried out in the West Coast Paper Mills to meet ever increasing demand of raw-material. This study has involved exhaustive work on storage of bamboo, improved technique of chipping with a view to improve the quality of chips and reduce the formation of oversized chips (slivers) and dust and the utilization of dust.

Coupled with above radical changes in pulping process with a view to obtain increased yield, production of lower dissolved solids in black liquor were also studied.

In the present paper, the above aspects have been dealt with.

RAW MATERIAL HANDLING

The annual bamboo requirement is about 75,000 tonnes (AD) of which 80 per cent is Dowga *(Bambusa arundinacea)* and Medar *(Dendrocalamus strictus)* and rest Chiva *(Monostigma oxytenanthra)* The bamboo used are dry and dead mixed with green and matured.

As moisture in bamboo varies from 10 to 40 per cent, it is very difficult to estimate the quantity received at mill site. Keeping that in view, two of the following methods (arrangements) were studied and employed with a view to countercheck the effect of each other.

1. Volume of the material in truck is measured, as the truck is received at the gate; and

2. The weight of the material in the truck is taken and adjusted for moisture with the help of

moisture meter to get the air dry weight of bamboo received.

The daily requirement of bamboo in the mill is of the order of 225 tonnes (AD). For this, we take into the process all the dry and semi-dry bamboo and any balance of green bamboo, if required, and send the rest to the bamboo yard for stacking. If dry and semi-dry bamboo is not sufficient, more of green bamboo is used. The green bamboo stacked in the bamboo yard is stored and earmarked for use during the rainy seasons when the supplies of bamboo from the forests are stopped.

Thus, against the total supply of 75,000 tonnes of bamboo, around 50,000 tonnes of bamboo are directly used in the process resulting in the saving of Rs. 5.0 lacs per year.

Due to the judicious use of the different species and the quality of bamboo the chips obtained are of uniform quality all round the year.

At the bamboo pond area some bamboos (around one percent) get crushed and broken into small pieces due to the plying of trucks etc. We have concreted the area and thus we salvage this bamboo as well.

The study is being made at bamboo yard about the deterioration of bamboo. For this a number of stacks were left in the yard. The losses in the first year were found to be about 6 percent. These stacks are left for next year to find out further losses.

CHIPPING

It is an established fact that the quality and the size of chips play a very important part in determining the yield and the quality of pulp (1, 2). We have made exhaustive study of the feeding of bamboo to chippers, the setting of the chipper knives, their angles and positions, regrinding of the knives, choice of the metal, reclaiming the knives. etc.

We are having Voith chiper rotors which did not have the wear plates. After the working of three years, we found that the rotor plates had wornout to the extent of 10-12 mm. The chips size had therefore increased to a great extent. Now the first thing we decided was to fix the wear plates on the rotors to get the original chips size. Fig. No. 1 gives the details of wear plate.

The speed of rotor has been increased from 400 to 500 r.p.m. This has resulted in chip with clean cuts free from bruises.

With a view to get the full and regular production from the chippers, the feeding of bamboo pieces has been regularised. Now, bamboos are fed uniformly, one after the other, without the accumulation of a number of bamboos. We have noticed that this has improved the performance of the chippers, reduced the jamming of the feeding and discharge chutes. To a certain extent this helps in the longer cutting life, of the knives.

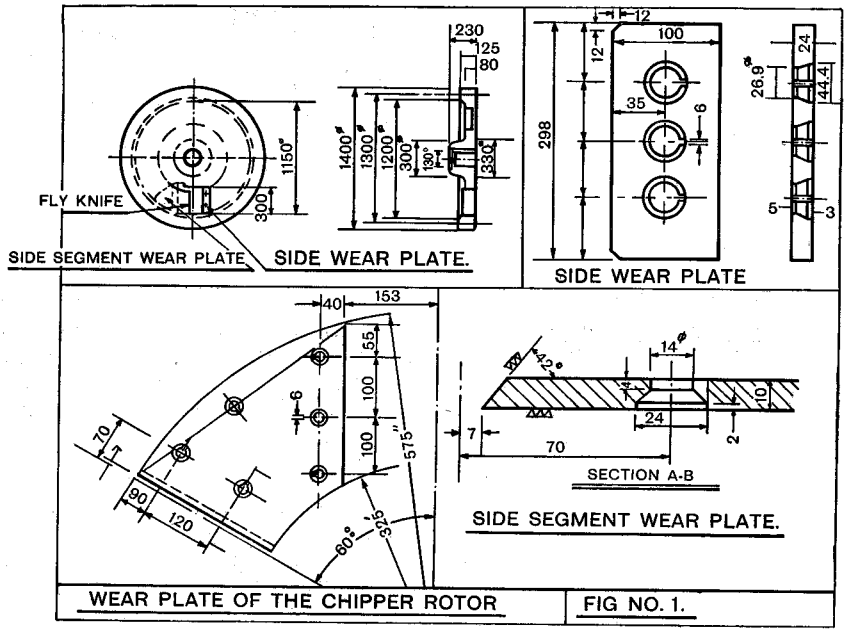

WEAR PLATE OF THE CHIPPER ROTOR

FIG NO. 1.

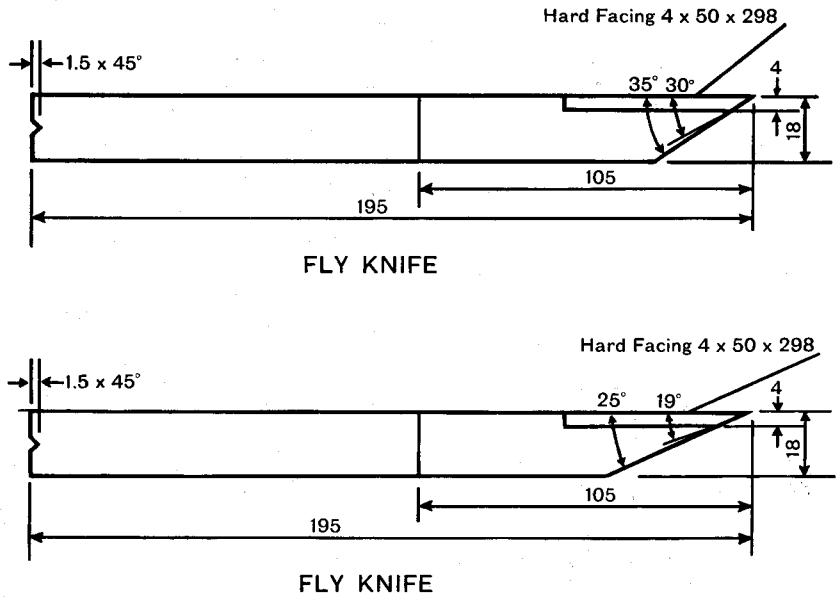

FLY KNIFE OF THE CHIPPER

FIG NO. 2.

The angle of the fly knives also play a very important part so far as the sharp cut is concerned. We found that knife angle at 19-25° in case of alloy steel knives, and 30-35" in the case of indigenous stalited knives (Fig. No. 2) gave satisfactory results.

The changing schedule of fly knives and dead knives is also very important. If fly knives are blunt, and bamboo cuttng is con-

tinued the chip quality is deteriorated to a large extent and the quantity of dust produced is much more and the chips are bruised which give weak pulp.

The fixing of the fly knives against the dead knife is done in such a way that during chipping operation there should not be abnormal gap between the two (Fig. No. 3). Otherwise, more slivers are produced that will consume more chemicals during cooking stage.

There has been a change in the grinding of fly knives. During the grinding, the grinding stone is gently pressed against the knife to remove minimum quantity of metal required, thereby reducing the excess loss of the metal. Against the removal of 1.5 mm metal previously we have now set it to around 0.75 mm. This has in no way adversely affected the performance of chippers and the quality of chips but has definitely increased the life of knives.

The projection of the fly knife in the rotor is responsible for the chip size. Therefore, this projection has been studied and a proper projection of fly knife, i.e. 15-16 mm, has been adjusted. (Fig. No. 3).

At present the bamboo chips have the following chip size classification:

Range		Percent
0- 5 mm	...	2.0
5-30 mm	...	60.0
30-45 mm	...	20.0
Above 45 mm	...	18.0

We are not yet satisfied with the design of the existing chippers as it is not suitable to chip 8" diameter of hollow bamboo. A good deal of research is necessary to come up with a chipper which will be appropriate for the type of raw-material which we use.

DUST UTILIZATION

In the early stages of the mill, the dust content used to be 7.5 percent and above. With the improvement in the bamboo processing and in chipping operations, the dust content has been brought down to 5.0 percent. This has considerably improved the economics of the process and resulted in the saving of Rs. 2.34 lacs.

Even though the quantity of dust is reduced considerably (5.0 percent), an investigation was carried out to find out whether the dust could be pulped and used in the process to get more yield. Gupta and Jain(3) studied the suitability of bamboo dust after sieve classifications for paper and rayon grade pulps. Manmohan Singh (4) prepared pressed boards from bamboo dust. Jain (5) studied the digestion of bamboo dust using soda process. Based on the above literature, systematic study of bamboo dust was made in our Laboratory.

The air dried dust was collected from the mill. A portion of the whole dust sample was analysed for ash and silica; and another portion was used for sieve analysis. The results are recorded in Table I.

By fractionating the dust through 36 mesh sieve, the fraction passing amounts to 17 percent of the total quantity having

TABLE I. Some Chemical and Physical Characteristics of Whole Bamboo Dust

Dust Samples	Whole Dust	+20 mesh Fraction	—20+36 mesh	—36 mesh Fraction	+36 mesh Fraction
Fraction %	100	43.8	39.2	17.0	83.0
Moisture %	15	—	—	—	—
Ash %	7.05	5.52	—	14.7	5.54
Silica %	5.86	4.97	—	11.3	4.93
Silica based on whole dust %	5.86	2.17	—	1.91	4.09

TABLE II, Chemical Analysis of Bamboo Dust and Sound Bamboo

		+ mesh Fraction dust %	Sound Bamboo —60+80 Fraction dust %
Ash	...	5.54	3.13
Si02	...	4.93	2.50
Cold water solubility	...	3.22	3.12
Hot water solubility	...	5.40	4.21
1.0% NaOH solubility	...	31.20	21.85
Alcohol-Benzene solubility	...	2.76	3.42
Pentosans	...	19.80	18.12
Lignin	...	26.20	24.15
Chlorite Holocellulose	...	62.30	66.50
Alpha cellulose	...	41.90	44.82

TABLE III. +36 mesh Fraction Dust Pulping Conditions and Pulp Characteristics.

Pulping Conditions constant to all the cooks.

Moisture in dust 15.0%; White liquor causticity 89.0%; Sulphidity 23.0%; Bath ratio 1:3.

Cook No.		1	2	3	4
Active Alkali as such, %	...	15.0	18.5	18.5	21.0
Max. temperature, °C.	...	150	150	160	160
Time to get max. temperature, mts.	...	90	90	90	120
Time of cooking at max. temperature, mts.	...	90	90	90	60
Total yield, %	...	56.0	53.8	52.5	50.0
Kappa No.	...	72	47	41.5	30.4
Ash in pulp, %		4.39	3.78	4.06	3.36
Silica in pulp, %	...	4.02	3.41	3.21	2.41
Ash on dust basis, %	...	2.46	2.03	2.13	1.68
$Si0_2$ on dust basis, %	...	2.25	1.83	1.68	1.20
$Si0_2$ odissolved during cooking of original dust, %	...	54.4	60.9	65.9	75.7

14.7 percent ash. The fraction retained on 36 mesh constitutes most of the dust (83%) and contains 5.54%) ash which is less than the ash in the original dust (7.05%). It is believed, that by screening the dust and using the fraction retained on the sieve, would not choke up the system and still be free from the high ash and the fines.

A fraction of +36 mesh was powdered until all the material passed through +36 mesh sieve. The —36 fraction dust was analysed and compared with the sound bamboo meal fraction (—60+80). The results are given in Table II.

PULPING OF DUST

The +36 fraction of dust (83% of whole dust) was pulped by sulphate process and the results are given in Table III.

The unbleached pulps were evaluated for strength properties by beating the pulps in the laboratory beater (200 Ts 66) and preparing standard sheets (T 205 m-58). The Test results along with unbleached bamboo pulp are recorded in Table IV.

BLEACHING

The unbleached pulps were bleached by C/E/H/ sequence. The bleaching conditions and results are recorded in Table V.

The bleached pulp from Cook No. 4, Table V, was evaluated for strength properties by beating in a Lampen ball mill (T 224 sm-45). The strength properties results along with bamboo bleached pulp for comparison are recorded in Table VI.

A series of experiments were carried out by blending different proportions of dust (+36 fraction) with bamboo chips and pulped to see the effect of dust on yield and pulp characteristicc.

First, the soaking tendency of dust and chips in white liquor was determined separately. The conditions and the results are given in Table VII.

It can be seen from Table No. VII that the liquor uptake by dust is much more than that of chips. Therefore, the pulping of the two together will not be very suitable. However, some cooking experiments were conducted using mixture of dust and chips to collect some relevant information. (Table VIII).

It can be seen from the results of Table VIII that except for the

TABLE IV. Strength Properties of Unbleached Pulps.

Cook No.	Bamboo Dust 1	2	3	4	Sound Bamboo
Final freeness, °SR ...	47	50	50	53	41
Basis weight, g/m² ...	57	57	60	56.2	60.1
Bulk, cc./g ...	2.24	2.13	2.13	1.81	1.52
Breaking length, km. ...	3.37	4.12	3.22	3.56	6.00
Stretch, % ...	3.0	2.7	2.7	2.7	4.1
Tear factor ...	56	56	56.6	65.5	90.2
Burst factor ...	16.5	20.5	15.8	22.2	42.0
Folding endurance, DF ...	4	6	6	16	100

TABLE V. Bleaching Conditions and Results.

Cook Numbers	1	2	3	4
1. Chlorination				
Consistency, % ...	3.0	3.0	3.0	3.0
Cl_2 added, % ...	18.0	12.0	11.0	8.0
Cl_2 consumed, % ...	17.36	11.61	10.65	7.98
Temperature, °C ...	28	28	28	28
Time, minutes ...	60	60	60	60
2. Alkali extraction				
Consistency, % ...	5.0	5.0	5.0	5.0
NaOH added, % ...	5.0	3.5	3.5	3.0
Temperature, °C ...	50	50	50	50
Final pH ...	9.4	9.8	10.0	11.0
Time, minutes ...	60	60	60	60
3. Hypochlorite				
Consistency ...	5.0	5.0	5.0	5.0
Hypo as Cl_2 added, % ...	5.5	4.0	3.0	3.0
Hypo as Cl_2 consumed, % ...	5.43	3.81	2.91	2.65
Temperature, °C ...	40	40	40	40
Buffer (NaOH) added, % ...	1.22	0.71	0.62	0.50
Time, minutes ...	120	120	120	120
Total Cl_2 consumed, % ...	23.3	15.4	13.6	10.6
Brightness, % ...	74	75	75	77.5
Cuprammonium disperse Viscosity, cP ...	46	36	36.5	29.0
Shrinkage during bleaching, % ...	17.0	13.9	12.2	10.0
Yield of bleached pulp (on dust), % ...	46.5	46.3	46.1	45.1

TABLE VI. Strength Properties of Bleached Pulp from Cook No. 4 and Sound Bamboo.

	Bamboo dust bleached	Bamboo bleached
Final freeness, °SR ...	32	34
Basis weight, g/m² ...	59.3	60.3
Bulk, cc/g ...	1.48	1.50
Breaking length, km ...	4.05	6.00
Stretch, % ...	3.5	3.5
Tear factor ...	54	61.2
Burst factor ...	23	42.5
Folding endurance, DF ...	5	4

TABLE VII. Conditions and Results of Dust and Chips Soaking in White Liquor.

		Dust +36 fraction	Bamboo chips
Bath ratio	...	1:5	1:5
Total time, Mts.	...	3	3
Temperature, °C	...	30	30
Concentration of chemicals, g/1	...	70	70
Liquor retained, %	...	50	16

Note : The percent liquor retention was determined by taking the chips/dust with the liquor on a fine screen. The liquor drained out was measured and the volume of liquor retained was obtained from it.

TABLE VIII. Dust and Chips mixed Pulping Conditions and Pulp Characteristics.

Constant conditions :				
Liquor sulphidity, %	... 21.4			
Liquor causticity, %	... 87.7			
Chemicals ($NaOH+Na_2S$), %	18.5			
Maximum temperature, °C	155			
Bath ratio	1:3			
Time to raise to maximum temperature, minutes	120			
Time of cooking at maximum temperature, mts.	75			
Cook No.		5	6	7
Chips+Dust, %	...	100+0.0	91.3+8.7	80.6+19.4
Total yield, %	...	53.2	53.0	52.5
Unscreened unbleached yield, %	...	50.0	47.0	47.1
Rejects, %	...	3.2	5.1	5.4
$KMnO_4$ No.	..	26	25	25.1
Ash in pulp, %	..	2.23	2.22	2.19
Silica in pulp, %	...	1.23	1.30	1.38

TABLE IX. Strength Properties of Pulp from Cook Nos. 5, 6 and 7.

Cook Nos.		5	6	7
Final freeness, °SR	...	40.0	39.0	41.0
Basis weight, g/m²	...	59	60	61.3
Bulk, cc/g	...	1.90	1.90	1.92
Breaking length, km	..	4.96	1.90	1.92
Stretch, %	...	4.0	4.0	3.5
Tear factor	...	108.4	88.6	91.3
Burst factor	...	40	34.3	33.8
Folding endurance, DF	...	21.0	156	93

increase in percentage of rejects when mixture of chips and dust were cooked, the other differences are not significant. Valley Beater evaluation of the unbleached pulps indicated that there is slight lowering of strength properties. The results are given in Table IX.

Unbleached pulps from Cook Nos. 5, 6 and 7 were bleached under identical conditions of chemicals, time, temperature and consistency. The conditions and results are recorded in Table X.

TABLE X. Bleaching Conditions and Pulp Characteristics.

Chlorination	
Consistency, %	3.0
Temperature, °C	30
Cl_2 added, %	12.5
Time, minutes	60
Alkali extraction	
Consistency,	5%
Temperature, °C	50
NaOH added, %	3.5
Final pH	10.8
Hypo treatment	
Consistency, %	5
Temperature, °C	40
Cl_2 added, %	4.0
Cl_2 consumed, %	3.7
NaOH used, %	0.3
Final pH	8.4
Brightness, %	78.0
Cuprammonium disperse Viscosity CP	36.0
Bleached yield (on original chips/dust), %	45.0

No difference was observed as far as the bleachability of the pulps was concerned. Only the bleached pulp from mixture of chips and dust was having slightly lower viscosities (Table X.).

From the results given in Table III it can be seen that the dissolution of silica during cooking is a function of alkali concentration and also to a certain extent of cooking temperature. Further, it could be seen that the unbleached pulps are rich in silica when conditions of cooking (especailly alkali charges) were mild.

Under the conditions studied, the Cook No. 2 Table III where Kappa number is 47, can be considered as optimum cook from the point of view of yield, silica dissolved and strength of pulp. The bleached pulp from dust has lower strength properties compared to pulp obtained from bamboo chips.

Even though the mixtures of chips and dust could be pulped together in the proportions described above, it is advisable to cook dust in a separate digester.

With the use of the +36 fraction dust a further saving of 3000 tonnes of bamboo per year was made. This resulted in a saving of Rs. 3.75 lacs. The total saving made due to better performance of the chippers, reduction in the dust production and use of dust of +36 fraction gave an impressive saving of Rs. 6.09 lacs.

OTHER IMPROVEMENTS

At the same time, while the chip quality and the chip yield

per tone of bamboo was being attended to, concerted efforts were made to improve the pulping process.

In this regard, the various variables like quantity of alkali used, concentration of chemicals in the cooking liquor (material to liquor ratio) the cooking temperature, period of cooking, etc., were studied. In the beginning 23-34 percent of cooking chemicals as such on BD chips basis, 1:3.5 material to liquor ratio, 170°C temperature, 6 hours cooking period (including 2 hours for raising to the maximum cooking temperature) were employed.

This gave us the over-cooked pulp of K. No. 14 to 16 and unbleached pulp yield of 42 percen. The black liquor solids obtained per tonne of pulp were 1.8 tonnes. After trying various pulping conditions at the same time improving chips size and qualiy, we were able to cook bamboo using 18-19 percent chemicals at 162°C temperature, 1:2.5 material to liquor ratio for a total period of 3 hours (including 2 hours for raising the temperature of the contents of the digester to the cooking temperature). This gave us a considerable fillup in the pulp yield (50%) at K. No. 24-26. There was steep reduction in total solids to 1.37 tonnes per tonne of pulp. This helped us to increase our pulp production without overloading the chemical recovery plant. Further, increase in pulp production was made possible by improving the efficiency of chemical recovery plant.

The productivity of the digester has been considerably increased in our mill. Due to the improvement in chips size and better packing technique, we have been able to load 20 tonnes BD chips against 15 tonnes earlier. The reduction of chemicals, the period of cooking and the temperature resulted in increase of pulp yield from 42 to 50 percent and above. The cooking cycle has also been reduced from 8 hours to 5 hours. Due to the above changes, the productivity of each digester has increased from 19 tonnes to 48 tonnes of pulp per day. Indeed it is a significant improvement.

The pulp obtained could be washed and screened satisfactorily and could be bleached by the multistage bleaching process to a pulp brightness of 78-82 percent. The bleached pulp viscosity was considerably higher (from 12-15 cP to 25 cP (CA) and above). The physical strength properties of unbleached papers

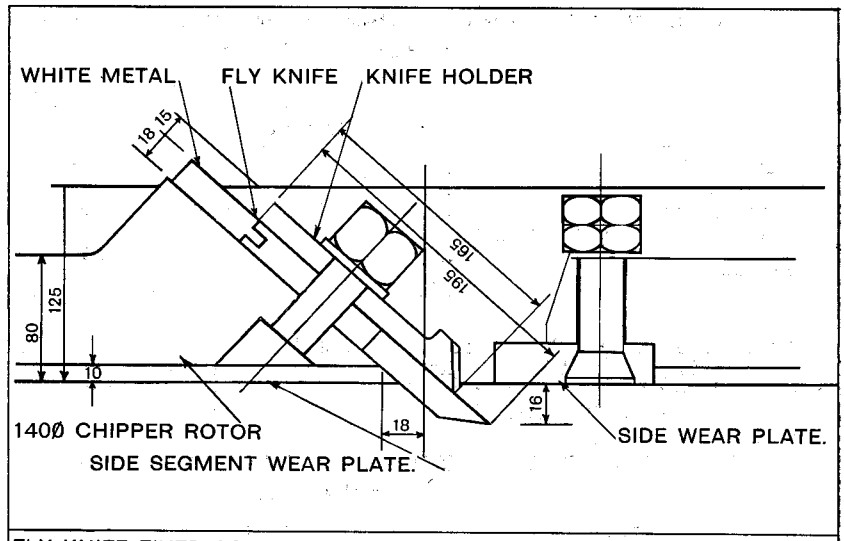

FLY KNIFE FIXED AGAINST THE DEAD KNIFE OF THE CHIPPER. FIG. NO.3.

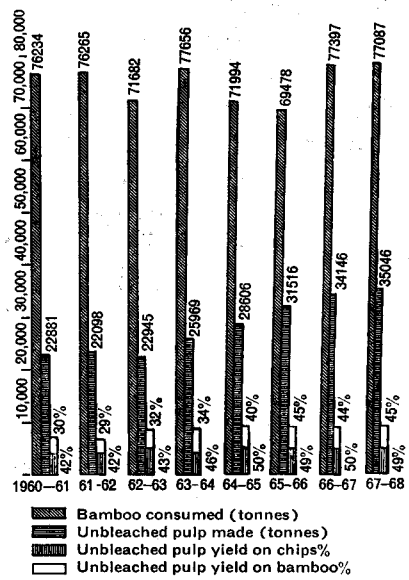

Fig-4 Consumption of bamboo and production of pulp.

have improved a lot. The filler content of the papers could be increased from 12 to 18 percent and paper machine speed could also be increased by 20-50 meters per minute. The paper thus obtained was characterised by good formation, high bulk, high opacity and satisfactory surface characteristics.

Due to vigorous and consistent vigilance a significant improvement has been made in the reduction of the losses of fibres and fines. This can be seen from the fact that previously the fibre losses from paper machine alone used to range from 4-6 per cent in the case of unbleached varieties and 6-10 per cent in the case of bleached varieties of paper. Now, this has been reduced to 1-2 percent fibre losses for all the varieies of paper. The valuable fibre so recovered has contributed towards higher yield of paper per tonne of bamboo.

The overall improvement at West Coast Paper Mills has been shown in Fig. 4, where the consumption of bamboo and the production of pulp for the years 1960 to 1968 are recorded. The reduction in the requirement of bamboo, lowering in cooking chemicals and total solids in

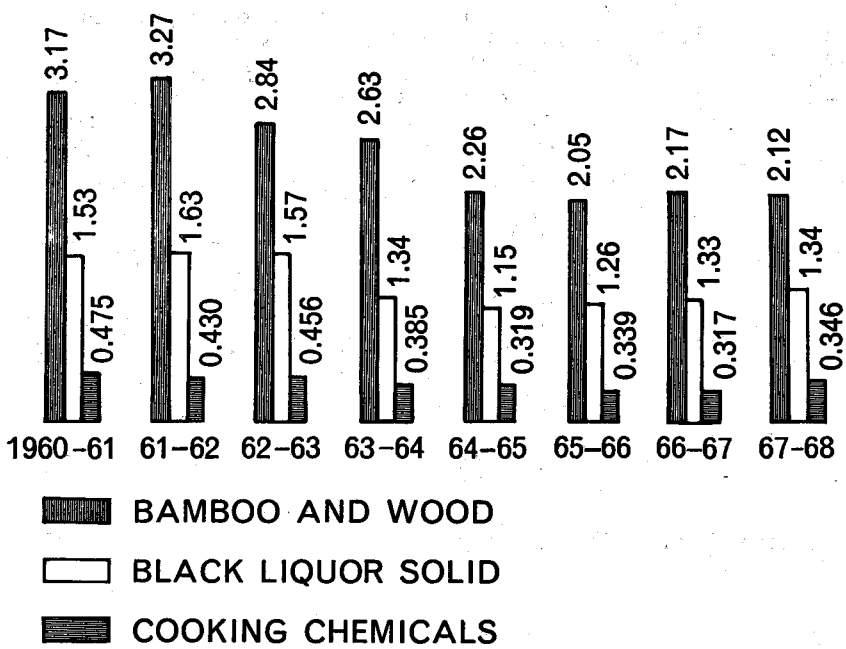

Fig. 5—Chemicals and raw materials Consumption per tonne finished paper

black liquor are given in Fig.5. An impressive saving of Rs. 26.9 lacs per annum has been by way of saving in bamboo alone (cost of bamboo at mill site being Rs. 125/- per tonne) made possible by reducing the bamboo wastage, improved chip quality, utilization of dust and high pulp yield compared to the production figures for the year 1960.

The significant success we have achieved in the improvement at different stages on the mill has made us to plan out for the future with still higher chemical pulp yield.

Since the pulp obtained would not be open, we plan to instal hot stock refining. This would give pulp of uniform quality for further processing. We are also planning to strengthen our bleach plant by installing high consistency towers, chests, etc., and the use of ClO_2 in addition to the conventional bleaching agents.

REFERENCES

1. Bausch, H., and Hartler, N., Svensk Papperstedning 63(9): 279 (1960)
2. Hartler N., and Onisko W., Svensk Papperstedning 65 (22):905 (1962)
3. Gupta M. K., Jain S. C., Indian Pulp and Paper 20(7): 433 (1966)
4. Singh M. M., Indian Pulp and Paper 15(4):201 (1960).
5. Jain S. C., Indian Pulp and Paper 14(4):213 (1959).

(Presented at the Seminar on 'Improvement of Yield from Indian Raw-materials' of the In-Indian Pulp and Paper Technical Association, Madras, March 14-15, 1969).

the yield figures is required.