Improving operation reliability and energy saving with a new pump design

BERGMAN AKE*

SUMMARY

Pump has once been called the "heart" of the process.

Since the disturbances in the operation of the pumps add to the production costs (interruptions in production, frequent adjustments etc.), it is important to choose every pump individually for the process, in order tn obtain the highest reliability and an easy maintenance.

Even in old mills, it is economical to replace the pump with constant disturbances with a new one.

Only when the "heart" of the process is a proper, reliable pump of modern design, it is possible to ensure that this does not cause any production interruptions.

PART I

OPERATION RELIABILITY

One of the most important factors contributing to the profit of a modern pulp and paper mill is the continuous operation without any disturbances. It has been estimated that the shutdown costs of a medium size paper mill amount to USD 3 000/hour.

Due to the fact that the various centrifugal pumps in a mill are the vital devices of the process, their continuous operation without disturbances must be ensured in order to minimize the mill downtime. In a medium size mill there are 200—300 centrifugal pumps, thus their functional reliability and handy maintenance should receive special consideration.

CRITICAL PARTS OF A CENTRIFUGAL PUMPS

The critical parts of a centrifugal pump in regard to its operation are :

a) Hydraulic parts (impeller and casing);

b) Shaft seal, which prevents the pumped liquid from leaking out from the pump casing through the shaft bore;

c) The power end with the bearings and the shaft, through which the power of the electric motor is conveyed into the pumped liquid.

The prerequisite of a good stock pump is a correct hydraulic construction which ensures continuous operation, high efficiency and suitability for various functions in the process.

On the other hand, the mechanical parts of b) and c) above are also very important in contributing to the reliability of the pump with minimum maintenance.

As shown in Fig. 1, a majority of all the service operation, relate to either the stuffing box area or the bearings. In this article we shall mainly concentrate on these two points of the pump.

*A AHLSTRÖM CORPORATION
Pump Factory SF-48601 Karhula
Finland

SHAFT SEAL OF THE PUMP

Different Types of Seals :

In the modern stock pumps, either a packed stuffing box or a mechanical seal can be used in the same pump (Fig. 2).

Influence of the Shaft Deflection :

An essential factor affecting the life of the seal is the shaft deflection at the stuffing box area : the smaller the deflection the lower the shaft vibrations and wear.

As the wear of the stuffing box progresses, the leakage out of the pump increases presenting the need to tighten the gland and thus increasing the wear of the shaft sleeve.

Excessive shaft deflection in connection with a mechanical seal destroys the seal fast, which results in a stoppage of the pump.

The deflection at the stuffing box area can be reduced by oversizing the pump shaft, but this increases the surface velocity of the shaft sleeve, thus resulting in a higher wear, and increases the price of the mechanical seal.

It is therefore vital to optimize the shaft size and to minimize the deflection with a right bearing construction.

Fig. 4 shows the effect of the bearing span on the total shaft deflection.

If the bearing span increases, the bearing load decreases but the total deflection increases. On the other hand, if the span is shortened too much, the total deflection decreases but the bearing load sharply increases, thus shortening the bearing life. By optimizing the bearing span, it is possible to reach the optimum relation between the total deflection and bearing load.

Lubrication and Cooling :

Another important factor affecting the life of a seal is its lubrication and cooling.

The stuffing box as well as the mechanical seal need to be lubricated in order for them to function properly. Disturbances in the lubricant supply cause dry running as a result of which the stuffing box "burns" and loses its sealing properties thus wearing the shaft sleeve excessively.

Fig. 5 presents various alternatives for the lubrication and cooling of the stuffing box with regard to the properties of the pumped liquid.

The mechanical seal requires lubrication and cooling liquid, but the necessary quantity is much smaller than that required by a packed stuffing box.

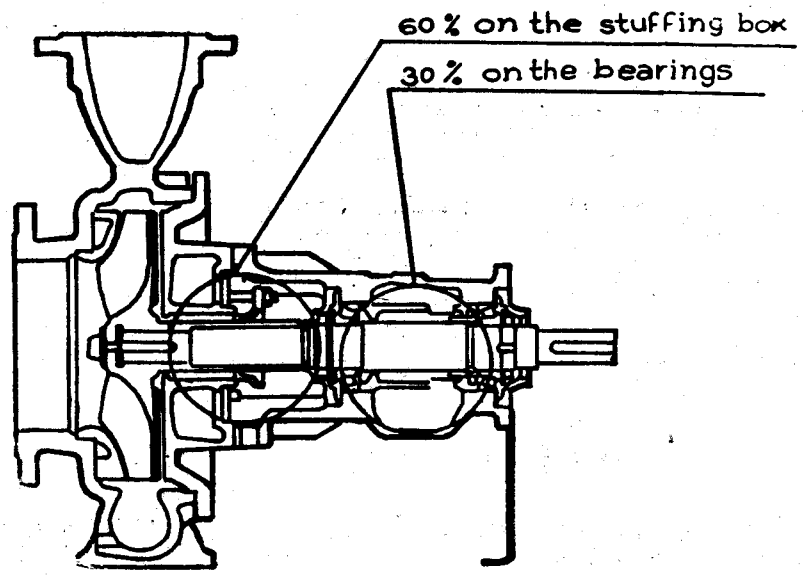

Fig. 1. Service work Frequency Distribution on Centrifugal Pumps

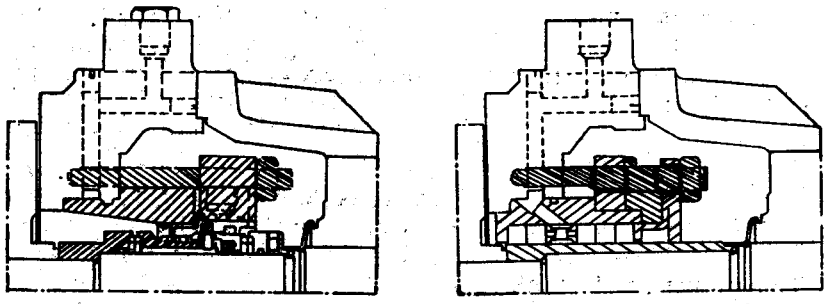

a) Pump Casing Cover with a Double Mechanical Seal

b) The Same Casing Cover with a Packed Stuffing Box

Fig. 2. Shaft Seals of A Pump When Using A Mechanical Seal vs. Stuffing Box. The only parts that have to be changed in connection with a seal conversion are those marked with a dash line.

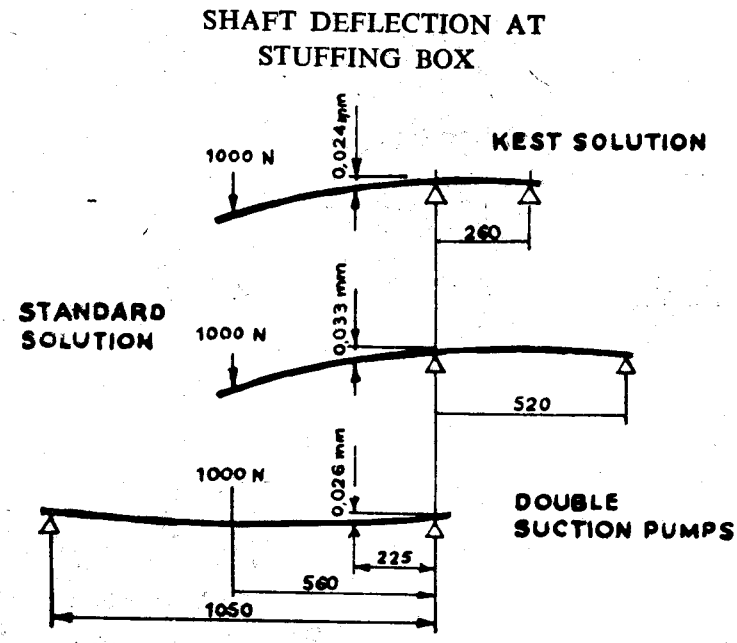

Fig. 3. Shaft Deflection on Equal Size Pumps

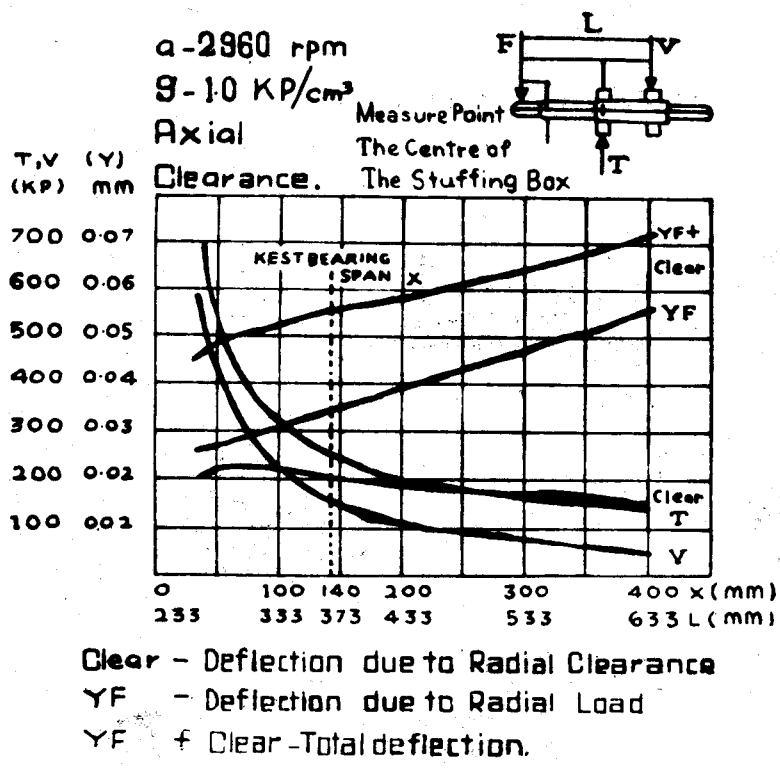

Fig. 4. Shaft Deflection vs. Bearing Load

Dry running on a mechanical seal causes scars on the seal faces, and consequently the seal starts to leak.

The signle mechanical seal uses the pumped liquid as lubrication liquid. The double mechanical seal requires external cooling and lubrication liquid, but the amounts are usually quite small and the liquid can sometimes be re-used after cooling. For the latest designs of double mechanical seals, the cooling and lubrication liquid (usually water) can be unpressurized.

Mechanical seals :

Fig. 6 presents the most common types of mechanical seals.

The mechanical seals are used in circumstances where

1. Lower water and energy consumption are desired;
2. Absolute tightness is required;
3. The leaking liquid develops gases which
   - are toxic
   - smell bad
   - catch fire easily;
4. Expensive liquids are pumped;
5. Ingress of air into the process could be harmful;
6. The pressure and/or temperature are very high or extremely low;
7. Less maintenance is desired.

Nowadays, the point 1 has made the use of mechanical seals more and more common in the pumps of the pulp and paper industry, too. because of the trend towards energy saving and environmental protection.

There are two basic constructions of mechanical seals :

a) Single seals, and

b) Double seals.

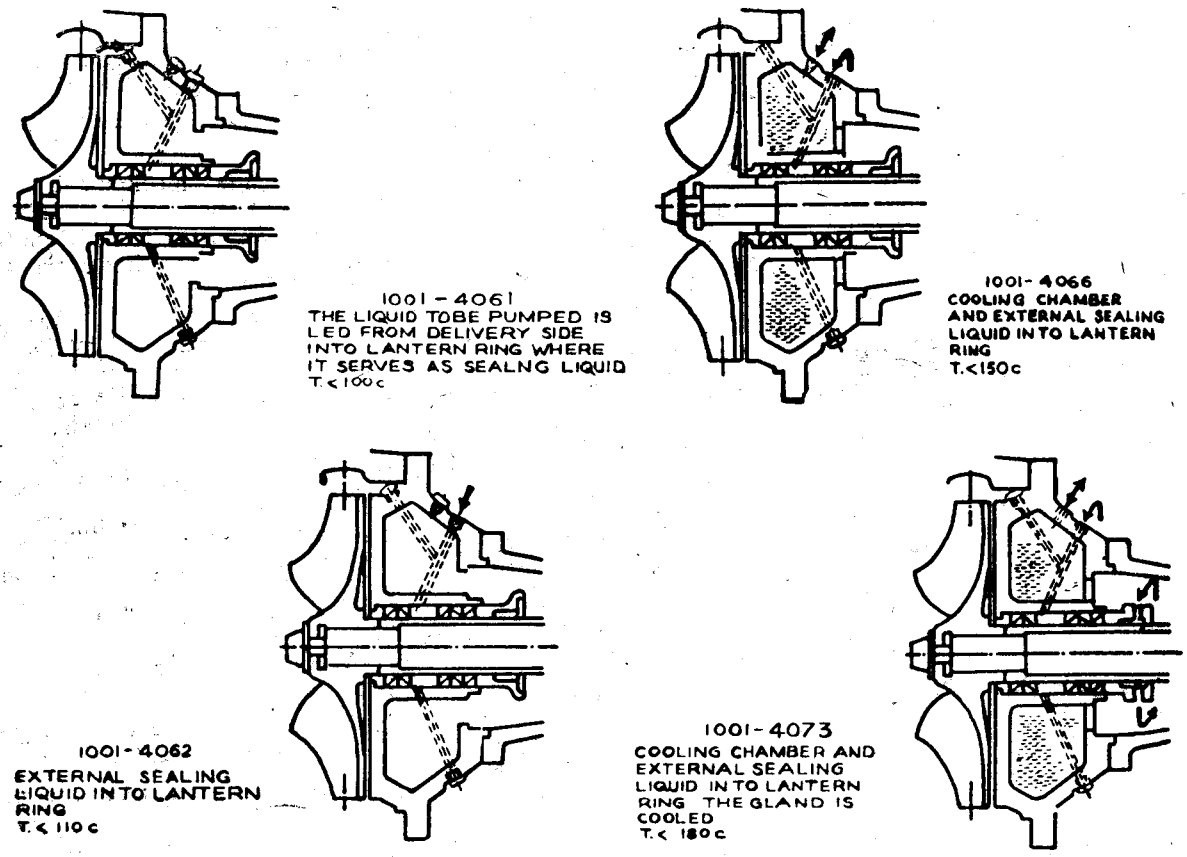

Fig. 5. a) and b) Seal lubrioation and cooling arrangement for stuffing box

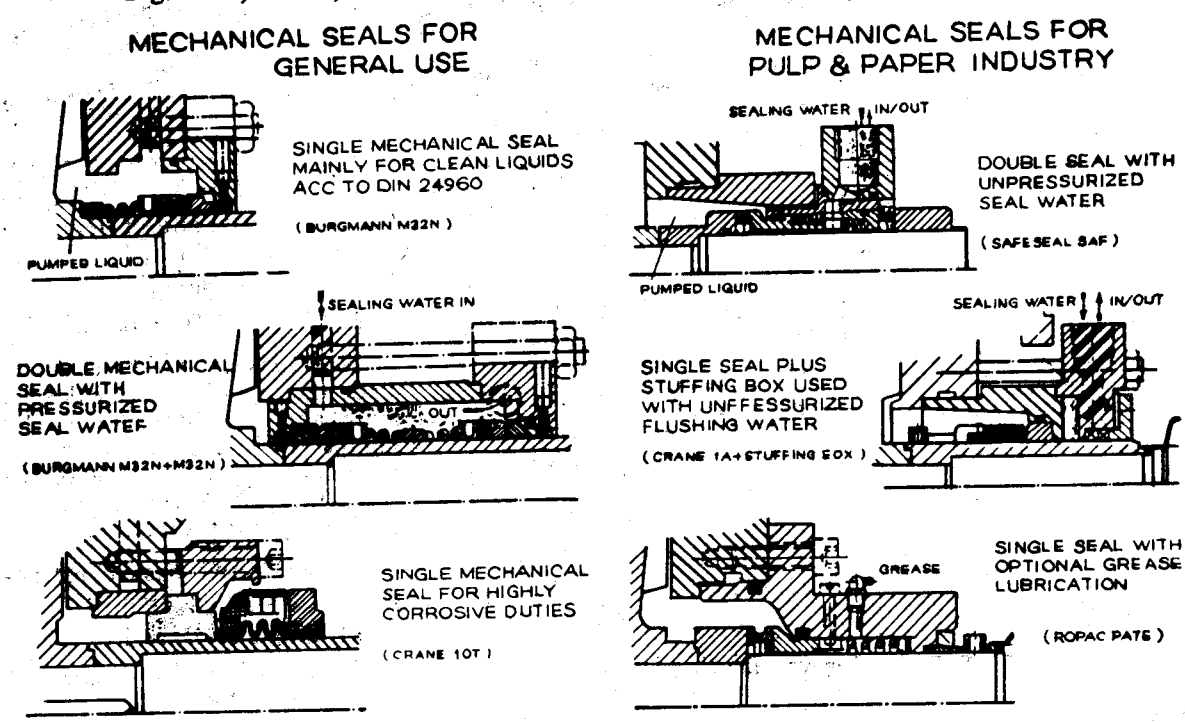

Fig. 6. a) and b) Mechanical seals for general use and for pulp and paper industry pumps

The single mechanical seal is used when the pumped liquid is clean and can be used as the sealing liquid.

The double mechanical seals are used when pulp or paper stock or lye is pumped or when hot, wearing, dirty, corrosive or equivalent liquids are handled.

PUMP BEARINGS :

Fig. 7 Presents the bearing unit of a modern stock pump.

Compared to other bearing types, the tapered roller bearings have a remarkably longer life (Table 1). Furthermore, when the bearings are installed in an O-arrangement, the construction is not so sensible to temperature effects. The rollers of the tapered roller bearings are in line contact between the outer and inner race. Thanks to this, they have a higher stiffness and steadiness than the bearings with spot contact.

In addition. the life of the pump bearings is affected by the following factors :

a) Clearance
b) Impurities
c) Lubrication

Clearance :

The bearing life shortens if the clearance is negative, and it also shortens if the clearnce increases. Thus the smallest possible clearance ensures the longest bearing life.

Protection :

The bearing life can be extended by preventing the ingress of impurities and water into the bearings.

Fig. 8 presents an efficient method of protecting the pump bearings against external impurities.

While rotating, a tapered roller bearing produces an outward pumping effect, so the lubricant (grease or oil) prevents the ingress of impurities into the bearing.

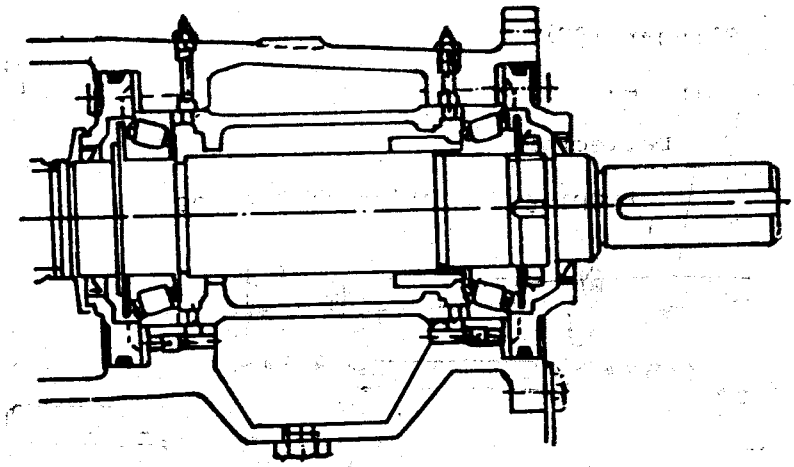

Fig. 7. A Bearing Unit with Tapered Roller Bearings

Table 1. Bearing Life Comparison

IN THE FOLLOWING EXAMPLE THE LIFE OF DIFFERENT TYPES OF BEARINGS IS CALCULATED FOR THE SAME LOADS AND DIMENSIONS.

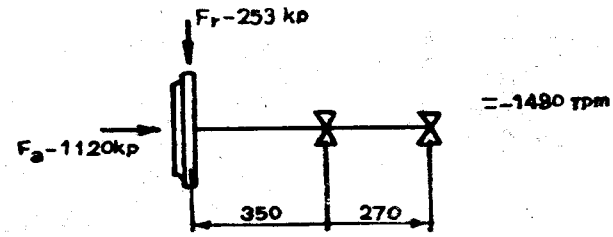

BEARING	LIFE
GROOVE BALL BEARING	2340 HOURS
ANGULAR CONTACT BALL BEARING 2 x 7220 BG O-/X- ARRANGEMENT	13190 -•-
DOUBLE ROW ANGULAR CONTACT BALL BEARING 3220	5620 -•-
FOUR POINT CONTACT BEARING QJ 220	22630 -•-
CYLINDRICAL ROLLER BEARING 23220 C	25920 -•-
CYLINDRICAL ROLLER BEARING 22220 C	3490 -•-
TAPERED ROLLER BEARING 32220	74480 -•-

Lubrication :

The pump bearings are lubricated by either grease or oil. The initial mode of lubrication is easily changed afterwards if necessary.

The construction of the bearing housing is such that oil cools down in the oil chamber thus cooling the bearings, and so allowing a higher rotating

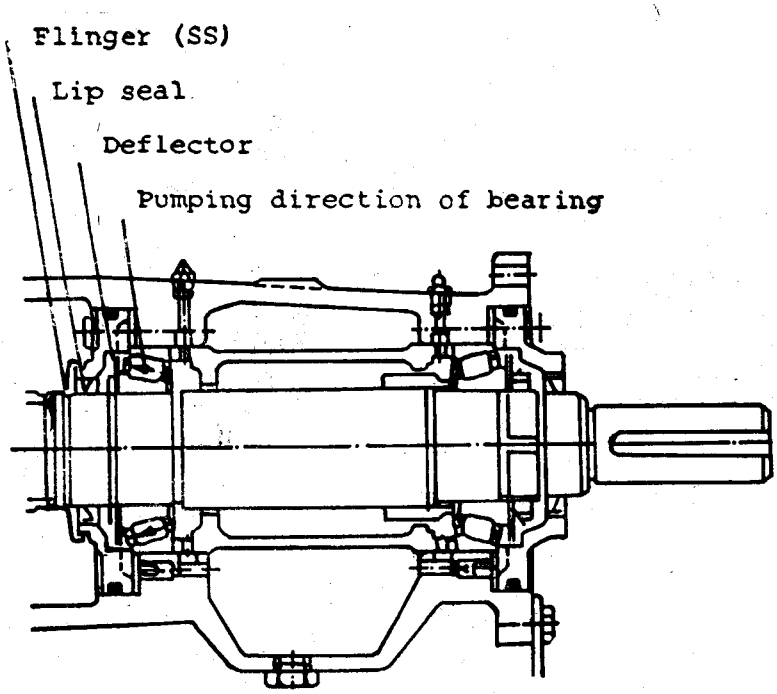

Fig. 8. Bearing Protection

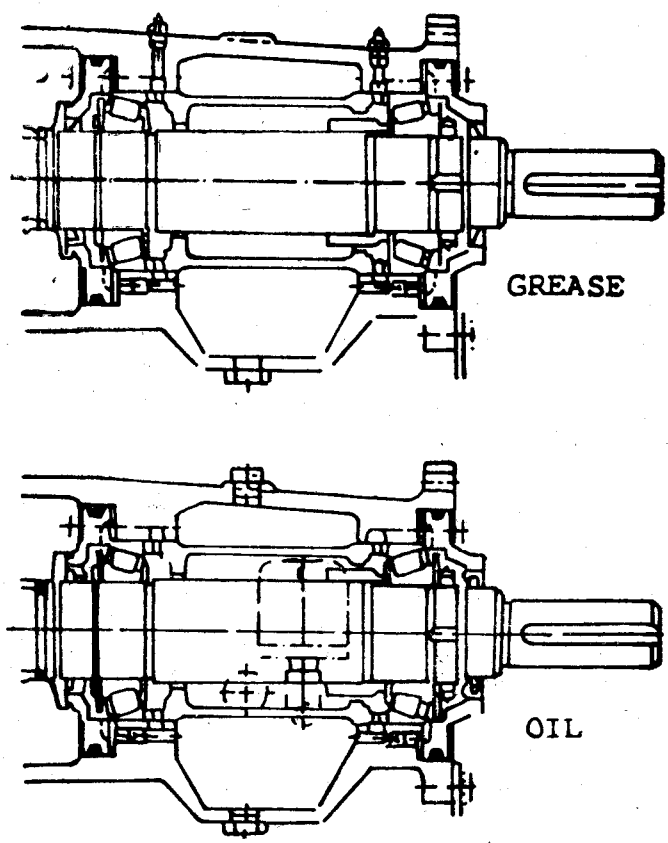

Fig. 9. Bearing Lubrication

speed for the pump and a higher temperature for the pumped liquid.

STANDARDIZATION OF PUMP COMPONENTS :

The standardization of pump components is one further advantage in favour of the modern stock pump.

This advantage benefits, in the first place, the pump maintenance : there is no need to store a large number of different spare parts for all the individual pump types. This means savings for the pump user in the inventory costs and reductions in the purchase prices of spare parts and, what is more, the maintenance itself becomes simpler.

It is also obvious that the standardization enables the pump manufacturer to produce components of the pumps in large series, which reduces the pump prices.

Power End :

The most advantageous objects of standardization are the power end and sealing parts. Instead, the hydraulic parts of the pump (casing, side plate, impeller) should be designed individually in order to obtain the highest possible efficiency with each pump.

Maintenance :

The pump standardization makes the service and maintenance operations easier and faster because all the power end parts and the parts liable to disturbances can be replaced at one time (Fig. 11).

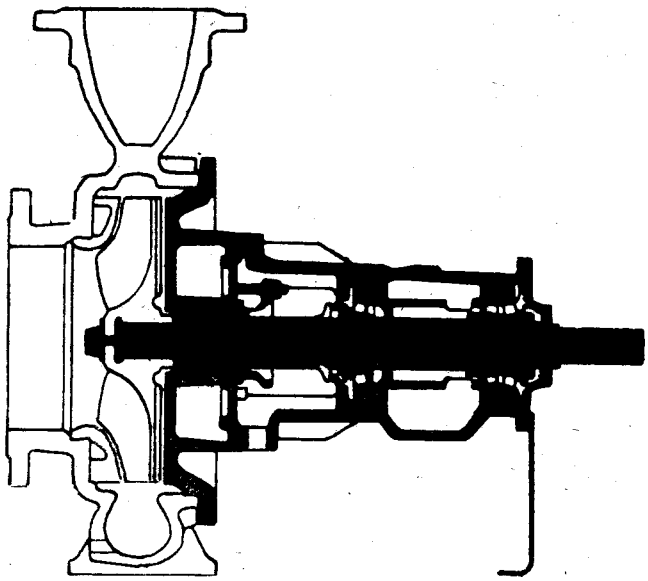

Power end

Fig. 10. Standardized Components

The entire replacement is accomplished quickly because the motor and piping do not have to be detached.

The replaced parts can be reconditioned in cleaner conditions and by means of proper tools in the workshop later on.

In connection with the replacement, it is easy to see the condition of the pump interiors, i.e. potential corrosion etc.

Table 2 presents the number of pumps and bearing units delivered to an integrated pulp mill.

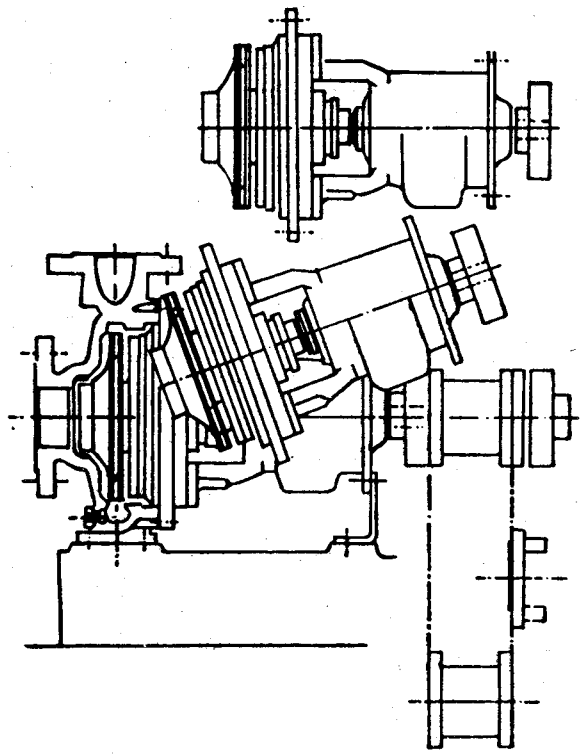

Fig. 11. Back-Pull-Out System

Table 2. Pump Standardization in An Integrated Pulp Mill

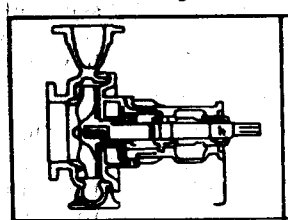		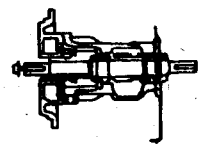	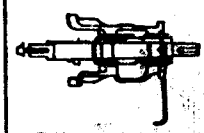
PUMP TYPE	QTY	BEARING ASS'Y + STUFF. BOX COVER QTY	BEARING ASS'Y QTY
KFL - 4	5	1	1 (BEARING ASS'Y F)
KFL - 5	3		
KFL - 6	3		
KHN - 6	4	1	1 (BEARING ASS'Y H)
KHN - 12	4		
THN - 10	4		
THN - 12	10	1	
THP - 10	7		
THP - 12	9		
TLN - 15	9	1	1 (BEARING ASS'Y L)
TLN - 20	10		
TLN - 30	4		
KLN - 15	2	1	
KLN - 20	1		
KLP - 15	4	1	
TLP - 15	6		
TLP - 20	12		
TPP - 20	7	1	1 (BEARING ASS'Y P)
TPS - 25	6	1	
SRS - 20*	3	1	1 (BEARING ASS'Y R)
SRS - 35*	3		
TRS - 25	7	1	
TRS - 35	11		
TRU - 35	5	1	
ERU - 30	2	1	
SLRS - 20*	3	1	
26	144	13	5

*SHAFT LENGTH DIFFERENT

PART II

ENERGY SAVING

SUMMARY

An important base for defining the energy saving potential on a given pump is a graph of the time distribution of pump flow. It tells if the operating conditions vary within a wide range or if they remain rather constant. When they deviate appreciably from the pump's rated performance, the pump should be either modified to meet the operating conditions or provided with the most advantageous means of regulation.

As for the means of pump regulation, speed control is advantageous for motor powers of 30 kW or more. Particularly when extra satety factors are used in pump selection, speed control always pays for itself.

Besides a proper choice and regulation of pumps, it is also important to use the most up-to-date stock pumping technology to achieve the best pumping economy. It is with this aim in mind that Ahlstrom developed its new stock pumping technique along with the new series of stock pump (T-pumps).

As indicated in this paper, pumping efficiency does generally leave much room for improvement : energy saving up to 25% should be quite possible even in large units. In an average-size mill, correct selection of pumps can easily result in savings in energy cost of 150.000 U.S. dollars a year,

PUMPING ENERGY :

There are some 200—300 centrifugal pumps running in an average-size mill. Those pumps altogether consume a considerable amount of energy. It has been calculated that their share in the total power used by a mill is in the range of 25—35%, amounting to about 5—9 MW in an average-size mill.

PRICE OF ENERGY :

The price of energy has continually increased and there are no indications that it would stop going still upward. The calculations which follow are based on a price of USD 0.05/kwh. Annual running time in the process industries being appr. 8000 hours, 1 kw of power costs USD 400—per year.

DETERMINATIONS OF THE TOTAL "COST" OF A PUMP :

How cost efficient a pump is depends on the following factors:

- Purchase price of the pump and related equipment
- Erection costs
- Related building costs
- Pump life
- Operating costs
- Production losses due to malfunctions

The purchase price of a pump is very low as compared with its operating costs. The latter are composed of the power consumption of the drive motor and the pump service and repair costs. In continuous operation, the major cost is the motor power consumption. A centrifugal pump can consume its purchase price in even a single month. The power consumption depends only partly on the efficiency of the pump and drive equipment. The pump selection and the capacity calculations are in most cases decisive for the total economy of the actual pumping work.

REASONS FOR INEFFICIENT PUMPING :

Inefficient pumping is caused by several reasons, the basic one being poor pump efficiency. The various reasons can be grouped under two main categories :

- Selecting oversize pumps in process designing phase
- Uneconomical operation of the pumps

Selecting oversize pumps in Process Designing Phase :

Pump Sizing According to Theoretical Peak Load :

When selecting a pump for variable process values, it is essential to know the time distribution of pump flow, i.e. how long the pump operates at each of the capacities. Optimizing power consumption requires that the best efficiency point of the pump be as near as possible the capacity at which the pump operates for most of the time. In defining the pump size, it is important to note that the maximum values of the different process variables do normally not occur simultaneously. Thus, the

pump selection should be based on well defined realistic process values rather than the most unfavourable combination of them.

It is sometimes advantageous to equip the process with two pumps of unequal size, one for handling the normal and the other the maximum conditions.

Safety Factors Used in Pump Selection :

Safety factors are very often used in pump selection to ensure that the pump will not become a bottleneck in the process. As seen from Fig. 12, a substantial energy cost is caused by even a slight oversizing.

Oversizing due to Lack of Basic Data :

If the basic data concerning the process, piping or equipment is not adequate, the pump selection will be unsafe, this resulting in choice of oversize pumps.

Oversizing due to Equipment Changes ;

After the initial selection of pumps, the process charts are often reviewed and equipment lay-outs changed. Parts of the pumps could be down-sized then, but they might be left as such.

Standardization of Pump Sizes :

One aim in selecting pumps for a new department is usually to get the number of different pump sizes as small as possible in order to facilitate the maintenerace. If this aim is pursued too far, there is the risk of selecting oversize pumps, which op.rate at low efficiencies.

Oversize Pumps as Ready Equipment for Anticipated Mill Expansions :

Often, when buying the pumps for a mill, provision is made for a future expansion of production. This, however, costs the mill a lot of money should the expansion be given up for some reason, so the pumps are left oversize—and thus operating at low efficiencies—for their whole life. And anyway, a manifold price for replacement pumps can be saved by the use of closely sized pumps, even if the expansion is carried out in due course.

Uneconomical Operation of Pumps :

Inefficient Stock Pumping :

A number of various methods for selection of stock pumps have been presented by technical literature and pump manufacturers. Common to these methods is that with increasing consistency the pump head and flow rate fall behind the water values. For example, at 5% consistency, the head developed on stock, in normal operating range, can be as much as 35% lower than the water head, while the power consumption remains the same.

The new stock pumping technique developed by Ahlstrom has yielded a centrifugal pump design (Ahlstrom T-Pump) that is capable of delivering on stock the same head and the same flow as on water up to 7% consistency, depending on the pump size (Fig. 2).

Even the power consumption and efficiency remain the same

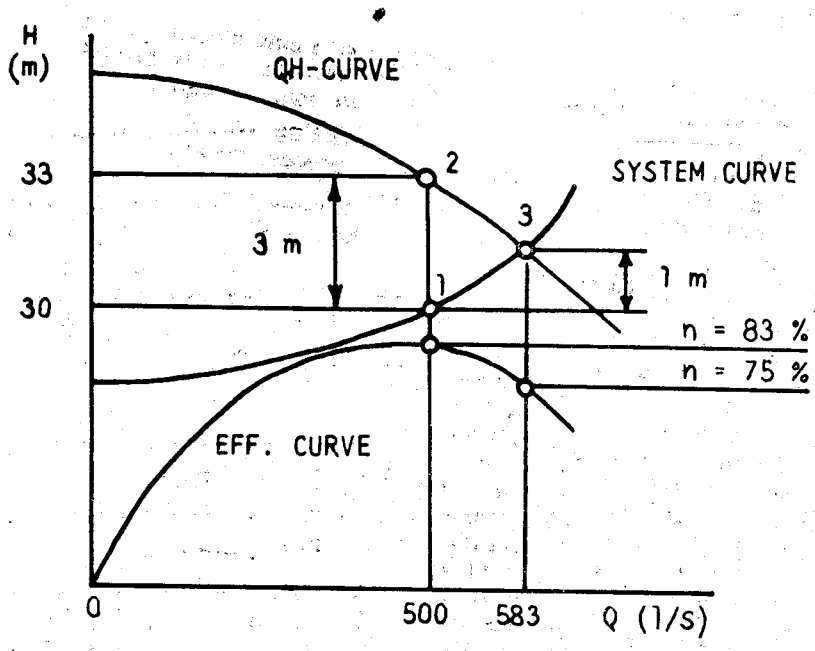

Fig. 12. Energy Cost due to Oversizing (10%). Required head 30 m (point 1), "overselection" 3 m (point 2). Unless the pump is throttled, its duty point is at intersection 3.

Power consumption and energy cost at the different points in Fig. 1 referred to Point 1, are :

Point 1	P = 177 kw	Relative	cost	USD	0 per year
Point 2	P = 195 kw	—„—	—„—	USD	7.200 per year
Point 3	P = 236 kw	—„—	—„—	USD	23.600 per year

as on water. If, instead, an impeller designed for water or unsuitable for stock is used, the head and efficiency, when pumping stock will decrease by 10-50% from the water values. This has to be compensated for by oversizing the pump correspondingly. Unfortunately, a head decrease does not lead to a corresponding drop in power consumption. The result is a reduced efficiency. The economy of such a pump is naturally unacceptable, as shown by Fig. 14, which illustrates the "cost" of using the old stock pumping technique.

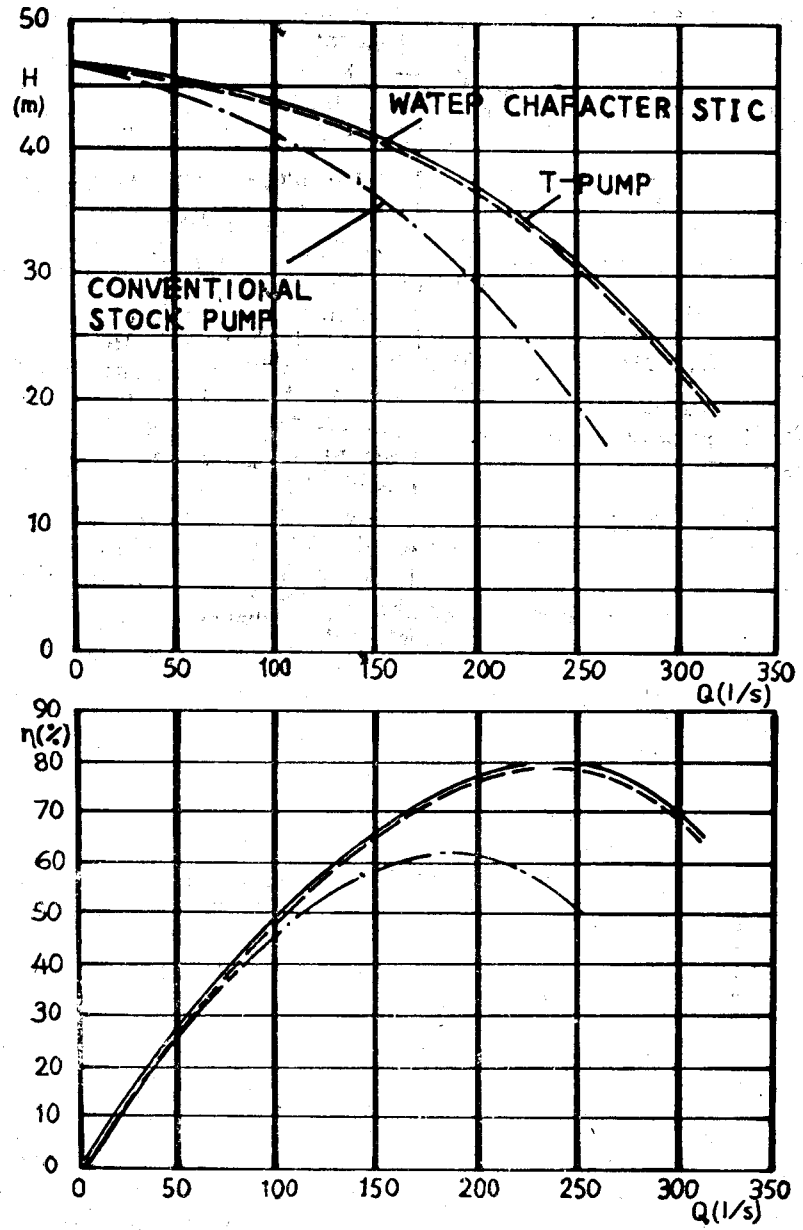

Fig. 13. The Difference Between the Modern and Conventional Stock Pumping Technique When Pumping 5% Chemical Pulp

Fig. 13 shows the characteristics on water and 5.0% chemical pump for on Ahlstrom T-pump and for a conventional stock pump of equal size.

Considerable energy savings result from the fact that the stock and water characteristics are the same. This benefit is gained through the Ahlstrom's T-pump series, as the T-pumps stock like water.

The power consumption on 5.0% chemical pulp of the Ahlstrom T-pump in Fig. 2 compares with the conventional pump of equal size as follows :

T-Pump

Ω = 230 l/s
H = 33 m
η = 79%
P = 94 kw

Conventional pump

Ω = 230 l/s
H = 33 m
η = 62%
P ≐ 120 kw

The power saving of 26 kw makes USD 10.400.—per year (8000 h, USD 0.05/kwh), which means that the price of the pump, in stainless steel construction, will be saved in less than one year.

Worn Pumps :

Efficiency of even the best pump will decrease if the pump is not properly maintained. The efficiency drop is mainly caused by increased leakage losses inside the pump.

A closely sized pump requires periodic maintenance for adjustment of clearances to their initial values. Should a pump never be in need of such an adjustment, it is much oversized, and, as a counterbalance to the low servicing costs, a manifold sum of money is spent to support the low operating efficiency.

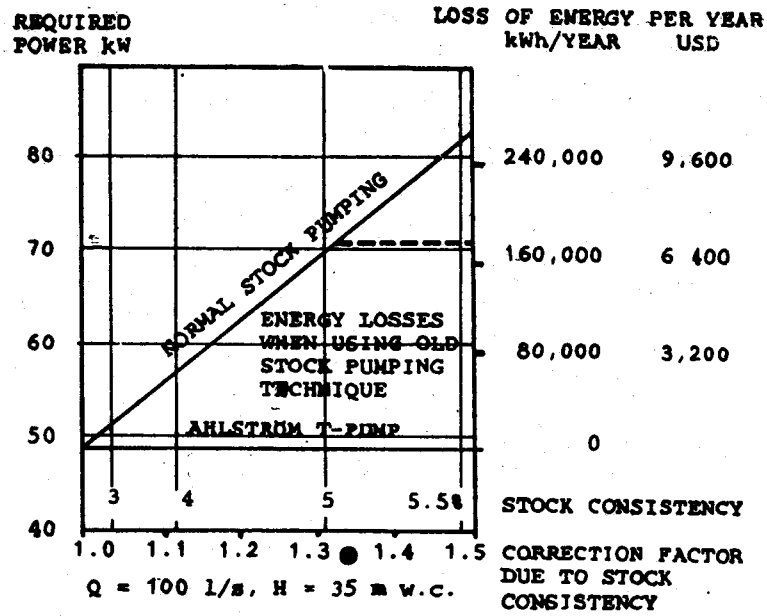

———Energy losses corresponding to the price of a new stainless steel pump

Fig. 14. Wasted Energy due to Uneconomical Stock Pumping. $\Omega = 100$ l/s, $H = 35$ m w.c.

Use of a Left-Over Pump :

It is often thought that a pump left in stock or removed from another service costs nothing and thus a new pump need not be bought. The old pump is, however, very seldom just the right size. Instead, it is much oversized quite often.

FINDING OUT THE SAVING POTENTIAL OF PUMPING ENERGY :

The first step in optimizing pumping energy is to check the actual operating conditions. This check-up comprises two phases :

— Measuring performance values

— Defining time distribution of pump flow

Measuring Performance Values :

Important aids in measuring the performance values and defining the operating point of a pump are the characteristic curves furnished by the manufacturer.

The operating point of a pump is defined from the measurements of :

— Flow rate
— Head
— Power consumption

Defining Time Distribution of Pump Flow :

The variation in the required capacity of a pump is usually depicted by a graph where the flow rate is shown—in the order of magnitude—as a function of time, the latter being expressed as percentages. See Fig. 15.

How Many Pumps Need Be Examined ?

As there always are a large number of pumps in a pulp or paper mill, checking all the

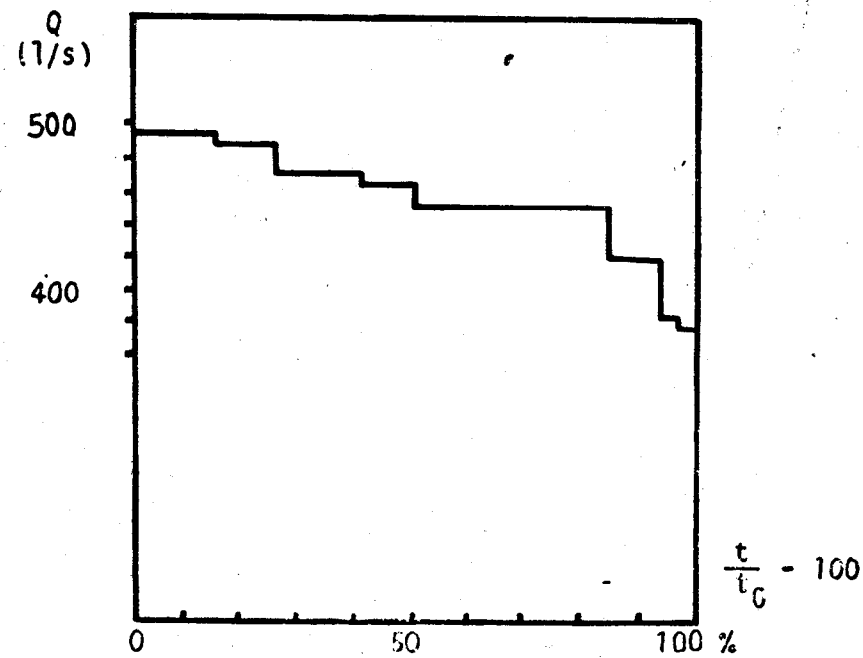

Fig. 15. Time Distribution of Pump Flow For a Pump Installed in A Level-Controlled Tank.

pumps would require an enormous amount of work. This is not even necessary because most of the pumps are small in size.

Table 3 shows the breakdown of the pumps in a paper mill in Finland according to the motor effects. It is seen from the table that the number of the pumps requiring 50 kw or more of power represents only 14.6% but their power consumption as much as 65% of the total.

The corrective measures can be divided into two groups :

— Modifying a pump to meet the operating conditions
— Economical regulation of the pump

Modifying A Pump to Meet the Operating Conditions :

Trimming of Impeller :

Trimming the impeller is an economical way of modifying pump performance provided the impeller diameter requires to be only slightly reduced. Thus, efficiency will not suffer appreciably.

Replacement of Impeller :

Should the trimming of the existing impeller reduce efficiency too much, it might be possible to order a new impeller from the pump manufacturer, as manufacturers usually have alternate impeller designs.

Replacement of Pump :

When the operating conditions of a pump change very much from what the pump was rated for, it is advisable to consider replacing the pump. The pump price is usually paid within a short time by the power savings through the improved efficiency.

Reduction of Running Speed :

In certain cases, when a pump is much oversized, the most economical approach is to reduce the running speed.

Economical Regulation of Pump Operation :

Speed Control :

The use of variable speed is usually the most advantageous means of pump regulation because efficiency of the pump remains roughly unchanged across a wide operation range.

TABLE 3—BREAKDOWN OF THE PUMPS IN A PAPER MILL ACCORDING TO THE RATED MOTOR EFFECTS

Power Rating kw	Number of Pumps		%	Rated kw	Power %	Totally
0 — 9	111		43.9	192	2.5	
10 — 19	42		16.6	504	6.6	
20 — 29	32		13.0	746	9.8	
30 — 49	30		11.9	1113	14.6	
50 — 99	20	14.6%	7.9	1210	15.9	66.5%
100 — 199	11		4.3	1590	20.9	
200 — 299	2		0.8	500	6.6	
300 — 499	4		1.6	1757	23.1	
Total	253		100.0	7612	100.0	

IMPROVING PUMPING ECONOMY :

The most important factor in pumping economy is the pump being sized to operate at or near its best efficiency point. And the higher the efficiency, the better, of course. When the operating conditions of a pump deviate from its rated performance, the pump requires to be modified or regulated accordingly, and, this should be done in the most economical way.

As the regulation of a pump is extremely difficult without some losses, the process should be so designed as to get the load distribution on the pumps as uniform as possible. The variation in load can be reduced, for example, through proper sizing and locations of the tanks in the system.

A change in speed causes the following shifts on the pump characteristics :

$$\frac{\Omega_1}{\Omega_2} = \frac{n_1}{n_2}, \quad \frac{H_1}{H_2} = \left(\frac{n_1}{n_2}\right)^2$$

$$\text{and } \frac{P_1}{P_2} = \left(\frac{n_1}{n_2}\right)^3$$

(Ω = flow rate, H = heat and n = pump speed)

As power consumption changes as the cube of speed, a reduction in speed reduces power consumption very sharply. Thus, if speed decreases to a half, power consumption will drop to an eight.

Using variable speed requires no control valve and thus results in a decrease of 3—5 m in the head requirement. This means substantial energy savings when large capacities are being handled.

The amount of savings is essentially dependent on the piping characteristics and the required variation in the pump capacity. The larger the share of dynamic losses in the total pipe friction, the more advantageous the speed regulation becomes. Other factors to be considered are pump size, shape of pump characteristics, running time, price of electricity and purchase price of the speed control equipment.

Intermittent Operation :

This mode of flow regulation is very simple and reliable and contributes to efficiency as it enables the pump to operate close to its best efficiency point.

Parallel Operation :

A common means of regulation, especially in water pumping stations, is to use two or more pumps in parallel. Those pumps are pumping liquid to a common discharge pipe, and the flow rate is controlled by varying the number of the pumps operating simultaneously.

The most energy-efficient system is achieved by providing one of the pumps with speed control. This offers the benefit of a continuous regulation without almost any losses.

Uneconomical Means of Regulation :

Throttling :

Throttling is the most common way of flow regulation because of the low equipment cost—especially if the head or flow range is narrow and the changes in capacity are not frequent, e.g. when the pump is oversized to allow wear. To minimize the loss of power, the characteristic curve of the pump should be rather flat.

By-Pass Line :

A by-pass regulation is concerned when part of the flow is led from the pump discharge back to the suction side. It is less economical than throttling because extra energy is needed for returning the excess flow to the pump inlet. In this case the characteristic curve should be steep to minimize the excess flow.

SUITABILITY OF PIPING :

The head required is made up of two components : static and dynamic head. The dynamic head is mainly composed of friction losses in the pipes. Thus, a careful piping design decreases the head losses-and saves energy. Every meter of pipe, every bend, throttle or enlargement represents an increase in the head.

Fig. 16 shows a nomogram where it is easy to see the annual energy cost caused by the extra head losses.

The head losses change as the square of the liquid velocity. Thus, with increased pipe diameter, the losses decrease, but, on the other hand, the price of the piping increases. The optimal pipe size is found by comparing the energy cost to the purchase price of the piping.

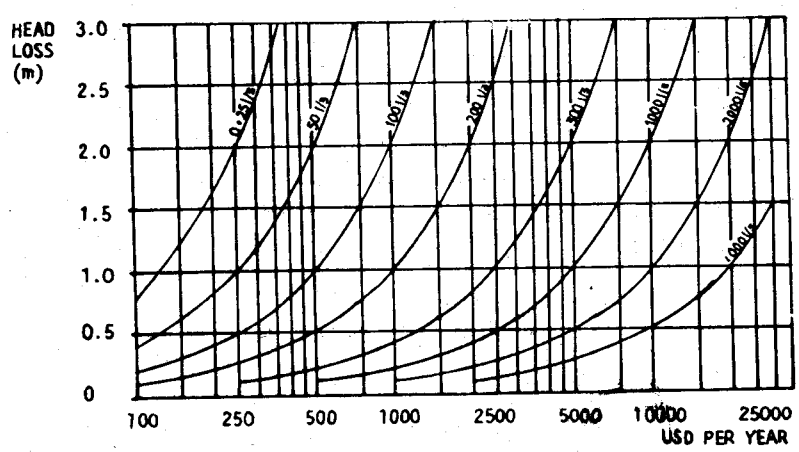

Fig. 16. Effect of Head Losses on Annual Energy Cost at Different Flow Rates (running time 8000 h/year, price of energy USD 0.05/kwh and pump efficiency $\eta = 80\%$).