Technological, engineering development and latest maintenance management technique adopted in M/s. The Andhra Pradesh Paper Mills Ltd., Rajahmundry

Satyanarayana A., Kundwal Rajiv, Mukerjee S.

Preamble

Mankind have always innovative thinking either due to sheer curiosity or for better living standard. This is the main spirit which has given us hidden treasures available in nature. To make human life more comfortable, purposeful natural resources are shaped/converted into machines and useful materials to reuse them for qualitative product, fast transportation, and reliable communication, etc. The information and knowledge gained through civilisation had to be documented and stored so as to impart it to future generation. Thus the necessity of suitable means like paper was developed and used.

It is in China when first "paper" was made. Our country made break through in paper making by installing 1st paper mill near Calcutta in 1812. Subsequently even though various pape mills were installed throughout the country, capacity of each unit was restricted, upto medium size mills, by international standards. After 1950—60, a few leading industrial houses had put big paper mills with mass and quality production out of single unit of pulp and paper mill.

Growth of any industry in this industrially advanced world, is dependant on continuous development in the product and upgradation of the machines producing it. Now advancement in technology in every industrial sector is so fast that any technology which has world wide acceptance, can not be taken for granted for decades. Price competition due to free trade market in the world and consciousness among people for environment has made Pulp and Paper Machine designer's jobs more challenging. Today higher production efficiency, superior product quality, responsive customer service and comprehensive environment is the greatest challenge faced by the industry.

The type of technology and equipment selection are made based on type of raw material used, size of the plant selected, environmental hazard and capital cost involved in technology. In case of certain sections of pulp and paper machine, basic technology and engineering is not changed at all, where in some cases it is partially or completely changed. Like other major pulp and paper mills of our country we in M/s. APP Mills have undertaken certain technological and engineering development works in various sections of our integrated pulp, paper and recovery plant. The concept for adopting better technology was to achieve higher productivity with good economic returns. Some af the various projects, which have been implemented successfully by adopting new technology in M/s. APP Mills are briefed as below :

Technological and Engineering Developments in Pulp and Paper Industry

Bamboo and Hardwood chip preparation plant :

The chip preparation plant, originally consisted of a number of "disc chippers" with built in "blow off" system. Each chipper had vertical volute (chutes) for bamboo and hardwood log feeding. The feeding arrangement for each chipper was purely manual with lot of "wait-in" time for each lorry to stand by the side of individual chippers.

Disc chipper with knife plates had to cut the log and simultaneously blow off the wood/bamboo chips for dust separation and bamboo/hardwood chips processing through screens. These chippers design were old and maintenance prone. The out-put through chippers had been very low and quality of chips was not uniform. As wood logs had to be fed manually directly to the chippers, the whole operation was dusty, and accident prone to the labour working there. Unit

The Andhra Pradesh Paper Mills Ltd.,
Rajahmundry-533 105 (A. P.)

power consumption by each chipper was very high due to multiplicity of unit and old design of the chipper disc.

To over come the inherent in-efficiency in design and operation of raw material chips preparation plant, installation of new plant with one of the latest design was conceived.

We had gone for two parallel streets of chippers each chipping bamboo and hardwood separately. High capacity drum chippers of German design i.e. VECO PLAN CHIPPER had been installed along with its associated equipment like screens, rechippers, conveyors and silo. The capacity of chippers were selected in such a way that neither lorries have to wait unnecessarily for longer period nor handling and maintenance of chipper needs too many man hours.

By means of new design chipper installed at our works, we have achieved higher productivity, improved working condition, creating accident free atomosphere, consistence in quality chip preparation and drastic reduction in man hours. Power consumption for same amount of chips is also brought down to one fourth of the original consumption. (Refer drg. 1a, 1b, 1c & 1d)

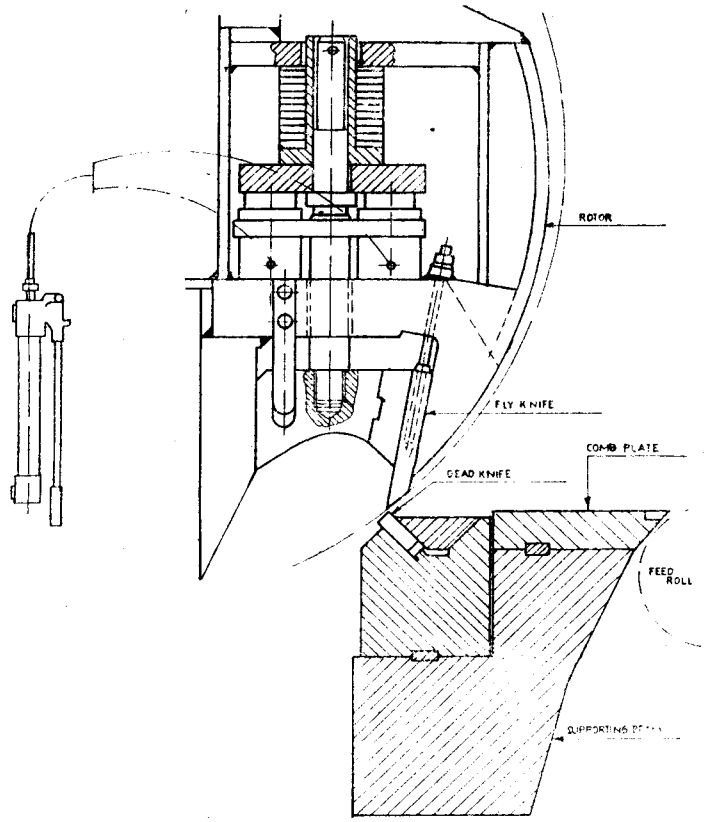

MODIFIED DEAD KNIFE ARRGT. OF DRUM CHIPPER

Drg 1b

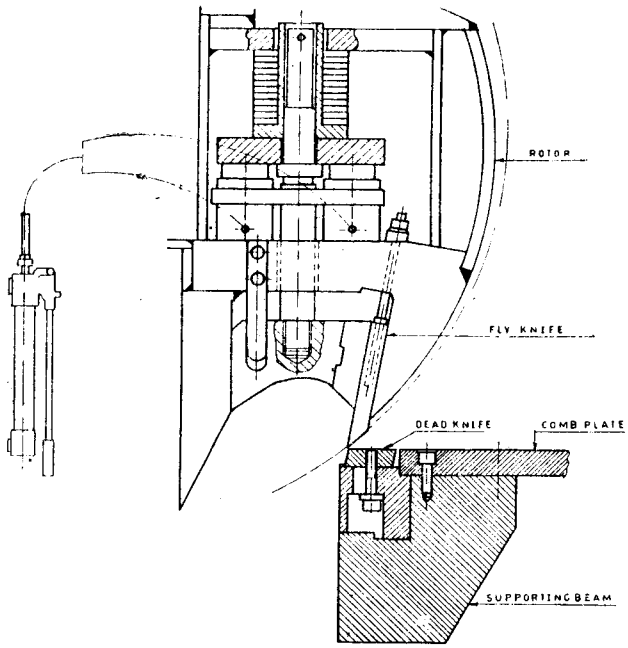

EARLIER DEAD KNIFE ARRGT OF DRUM CHIPPER

.Drg 1a

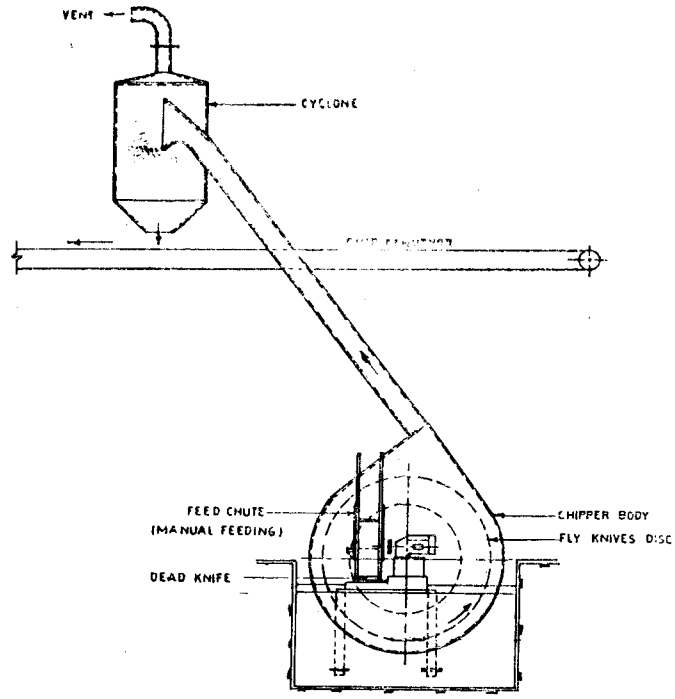

WIGGER DISC CHIPPER

Drg 1c

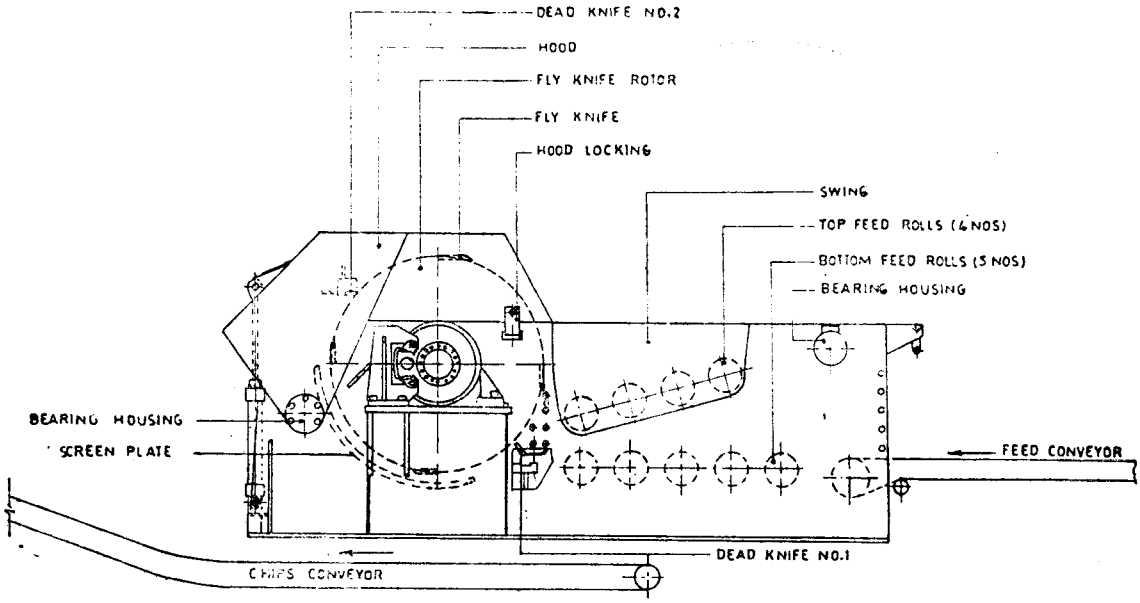

VECO PLAN DRUM CHIPPER

Drg 1d

Free Flow falling film Evaporator Plant :

To process (2100–2000 M^3/day black liquor) we had conventional type short tube vertical evaporator. These were 5 bodies and 4 effect evaporator to concentrate black liquor generated during various stages of washing the raw pulp. Short vertical tube has deficiency of poor steam economy, frequent body change for cleaning purpose, chemical loss during water boiling and no provision for separating foul condensate.

Due to frequent outage of each body one after the other and excessive man power involved for maintenance, we looked for advance technology on black liquor evaporation plant. Various advantages for discontinuing old technology based on short tube evaporator plant and, adopting new technology for steam economy, trouble free operation, and least maintenance required.

The Rosemblad falling film evaporator installed and put into operation at APP Mills is a seven effect, seven body system, type free falling film evaporator. All bodies in this systems are essentially the same except for size.

Each vessel is equipped with heating elements, heating element support, a liquor distribution system, steam inlet and vent headers and vapour entrainment separator. The evaporator heating elements are of stainless steel dimpled plate type. The live steam to be condensed flows concentrated is distributed out side of the elements in the falling film configuration. The vapour evolved from the boiling liquor film escapes horizontally from the heating surface and then flows via the conduct formed by the vapour body. The generated vapour passes through vertical vane in impingement type and becomes the live steam for succeeding effect.

Evaporator effects 2nd to 7th are each equipped with a transfer pump. These pumps are used for transferring liquor on flow type level control from evaporator sump to the distribution tray of the preceding effect. (Refer drgs. 2a, 2b, & chart 1)

Installation of Trinip Press by replacing open draw press at our High speed paper machine :

The main function of press section is to remove as much water as is comparable with product quality. In addition, the press section has significant impact on machine runnability, paper uniformity and sheet quality. In High speed paper machine we had semi-

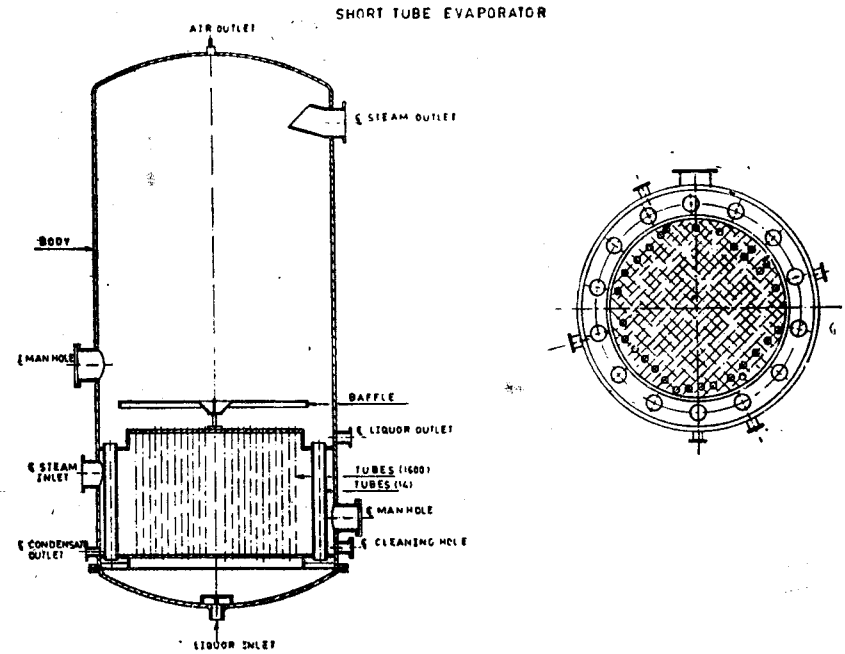

Drg 2a

PASCO-ROSCO FREE FLOW - EVAPORATOR

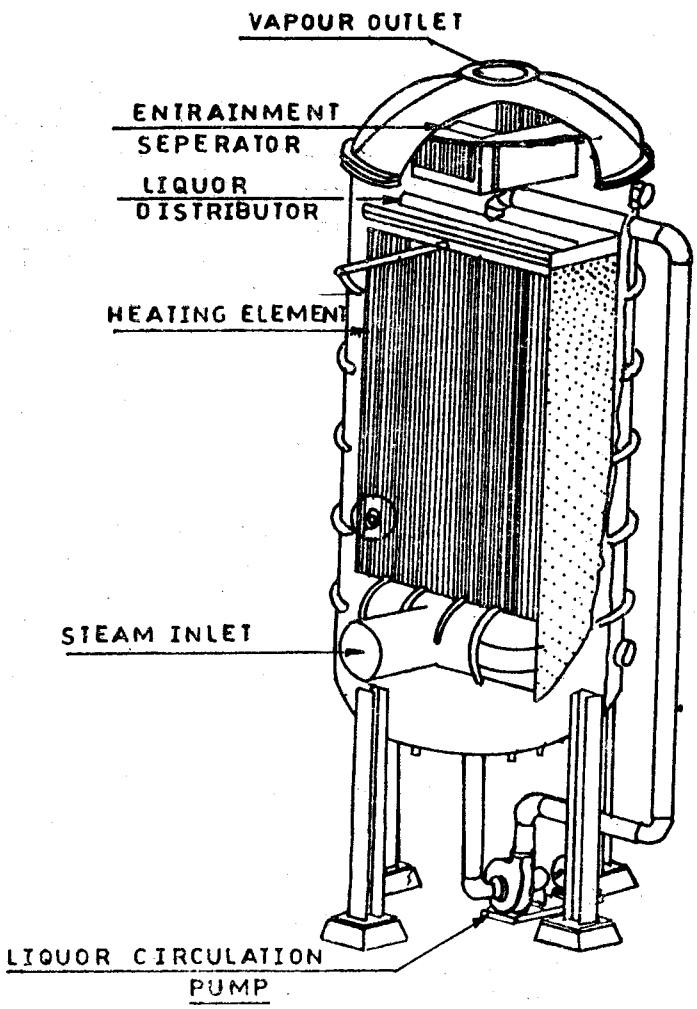

Drg 2b

CHART—1

Comparison

The free flow falling film evaporator has the following advantages than the other type of evaporator run earlier in APPM.

SHORT TUBE VERTICAL EVAPORATOR	4F EVAPORATOR
1. 5 Bodies, 4 effects	7 Bodies, 7 effects
2. One body can be always by passed for cleaning	No by passing arrangement
3. Steam Economy 2.8 to 3.0	Steam Economy—6
4. Considerable loss during water boil out.	No chemical loss
5. Steam pressure has to be raised in Ist body as per the tubes fouling	Uniform Ist Body steam pressure.
6. Maintenance very high	Minimum maintenance
7. Foul condensate—not separated.	Condensate split into a) Clean condensate b) Foul condensate
8. Down time was more due to body change overs at least twice in a month in each street.	No such down time.
9. Man power requirement is more due to scale removal in the bodies.	Not needed.

modern press section, where in the dewatering of the sheet is done in the first pick up-cum-suction press and second straight through press. The sheet travel on this press had to cross three open—draws before entering into dryer section. At higher speeds this type of open draw would develop sheet wrinkles, creases in nip and frequent sheet breaks. It has been our experience that apart from loss of strength of wet web in open draw, the loss in machine operating efficiency was as high as 5—10% depending on speed and GSM run on machine.

There is a relationship between press drynes, sheet density and sheet strength which varies with different furnishes. Increasing the press dryness increases the sheet density at the reel, which increases most of the strength properties of sheet except tear. Due to developments in the pressing area the possibility to give us dryness levels in the order of 45-60% of those products that allow this from quality stand point, a close draw press section thus becomes a much desired necessity with this concept APP Mills had successfully rebuilt trinip press by replacing open draw press for its high speed paper machine. (Refer drgs. 3a, 3b)

Computer guided process parameter controls and its related information systems :

Introduction of computers for process parameters were introduced in the year 1950. Early system provided basic measurements and analogue feed back control, information displays using meters and recorders and hardware design for specific application. By 1970 the mini computer provided computing power in the cost effective areas for process control. New sensers are developed to take advantage of this processing power and of the increase in demands to place more process variable under control.

To have improvement in quality and consistency, economy in steam at dryer section effective control on head box for basic weight and good control for sizing, we have successfully implemented computer for one of the paper machine.

By utilising artificial intelligency of computer and an eye of sensers, we have achieved targetted, benefits in uniform and accurate GSM in Machine-cross direction, optimisation in steam consumption at dryer section, economic use of sizing.

Gist of various development worKs undertaken by shop floor engineers and managers for debottlenecking the technical problems for higher productivity.

a) To avoid slippage of wire and better life and runnability of fabric wire, original copper lining wire rolls are changed to diamond lining rolls.

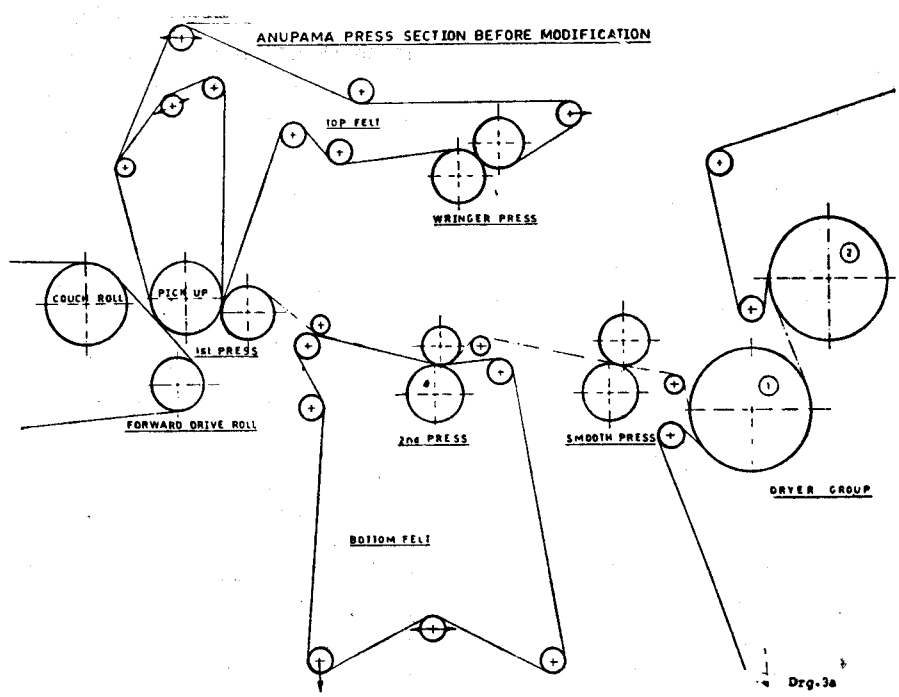

Drg 3a

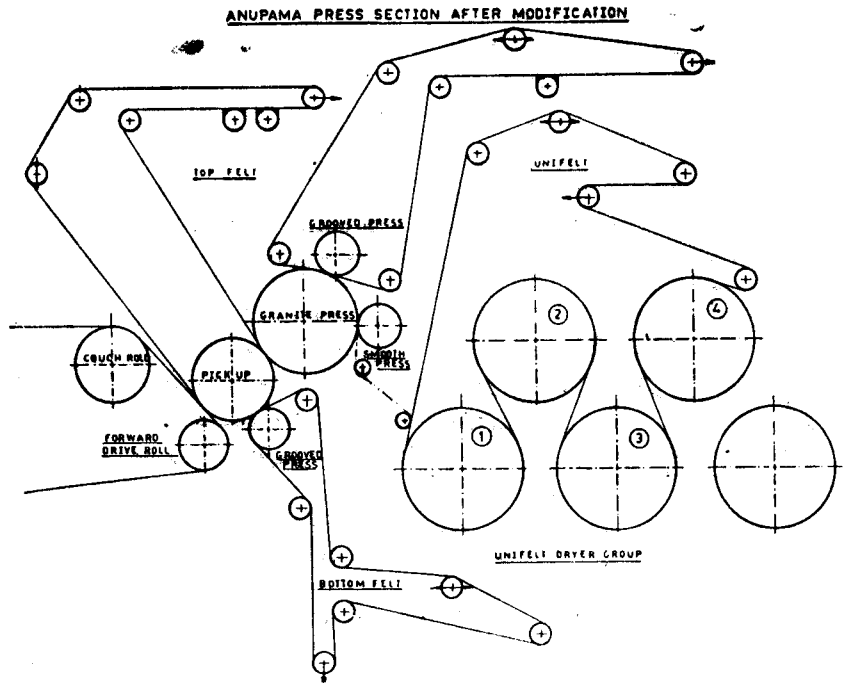

Drg 3b

b) To reduce power consumption and slippage in wire, forward drive roll lining is changed from ebonite to FAB-MAT (synthetic rubber).

c) To avoid excessive corrosion in felt rolls located at I dryer and II dryer group, where moisture content in web is more, hard chrome lined felt rolls are used.

d) To avoid per-dorminant static electricity in lead roll at size press, lining of lead rolls are changed from ebonite to dyna roll.

e) Jhonson rotary joints in dryer steam boxes, which had total 15 components (each) is dispensed with Escherwyss design steam joints of merely 6 components with one carbon ring only.

Conclusion :

Development in technology is a continuous "on-going" process. Perhaps the process and engineering in a part of process-loop, if considered to be perfect, may become absolute or rather objectionable tomorrow. Due to the restrictions on account of pollution control and/or to get maximum financial benefits, continuous development in industry is key for its survival. With the help of employees, their skill and knowledge, timely action for modification and development works taken on existing mill and its equipment shall decide the future of the company's growth.

Development in maintenance management of Pulp and Paper mill equipment, Mechanical, Electrical, Electronics and Instrumentations :

Now it is an accepted fact by all pulp and paper industry technocrats that Pulp and Paper making is no more an art but an engineering work. With phenomenal growth in pulp and paper making, the role of engineering services has become more critical and much desired.

Due to stiff competition among various pulp and paper making mills in the world, it has become necessary to keep equipment available for maximum time. By virtue of bigger sizes of the equipment, higher operating temperature, pressure and higher rotating speed of the equipment, old methods of maintenance have become obsolete and not worthy. These factors have compelled maintenance engineers to have a fresh look at the system of equipment maintenance schedule and modify the same to suit the present day requirement. The scope, technique and approach may vary from mill to mill and place to place but basic classification can be made based on engineering branch and type of equipment in operation.

Even though there are different type of equipment for different applications, high technology based equipment have helped maintenance engineer to adopt some sort of similarity in approach for monitoring the healthiness of equipment/operating system as a whole. Few common trend analyser useful for predictive/preventive maintenance are as given below :

a) Behaviour indication
b) Unhealthy trend alarm system
c) On line condition measurement
d) Check on demand measurement
e) Operating limits and tolerances with alarm and safe trip system
f) Auto monitoring/logging datas
g) Provision for safe isolation of equipment as and when required.

These health indications when incorporated in the system, enables the maintenance engineer to act depending on the indication available before the equipment is compelled to misbehave due to its component failure and further avoid accidental break down of the machine.

Modern techniques of maintenance management :

In M/s. APP Mills we have evolved a method where health of equipment is monitored closely either through the comparison between operating parameters of the equipment and standards available with us or by feel of touch and noise levels. Our entire approach and subsequent decisions for maintenance are based on PREDICTIVE HEALTH CONDITION INDICATION AND SUBSEQUENTLY PREVENTIVE ACTION PLAN. (CHART 2 & 3)

CHART—2

Predictive Maintenance Flow Chart

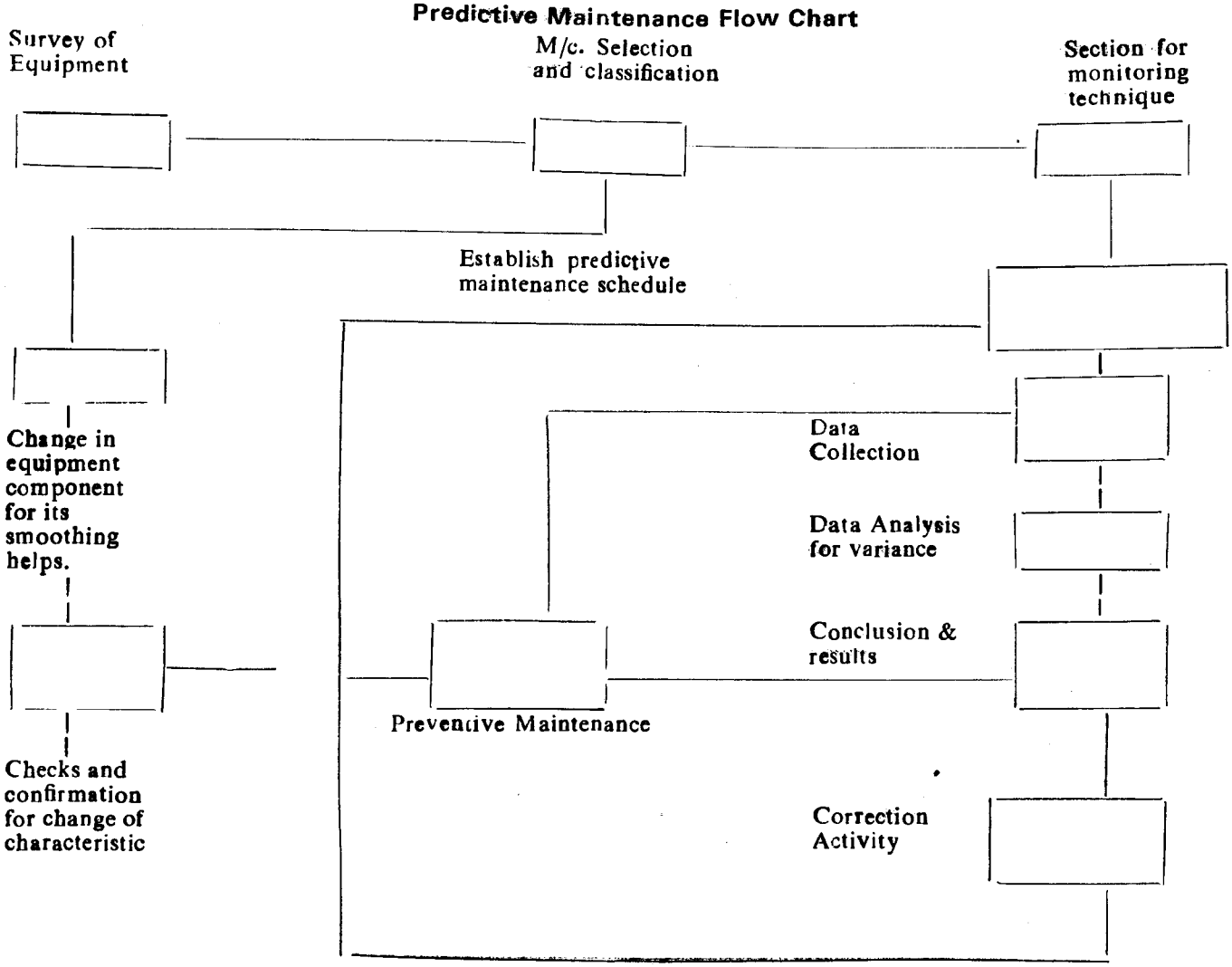

CHART—3

Maintenance Manager Data Analyser

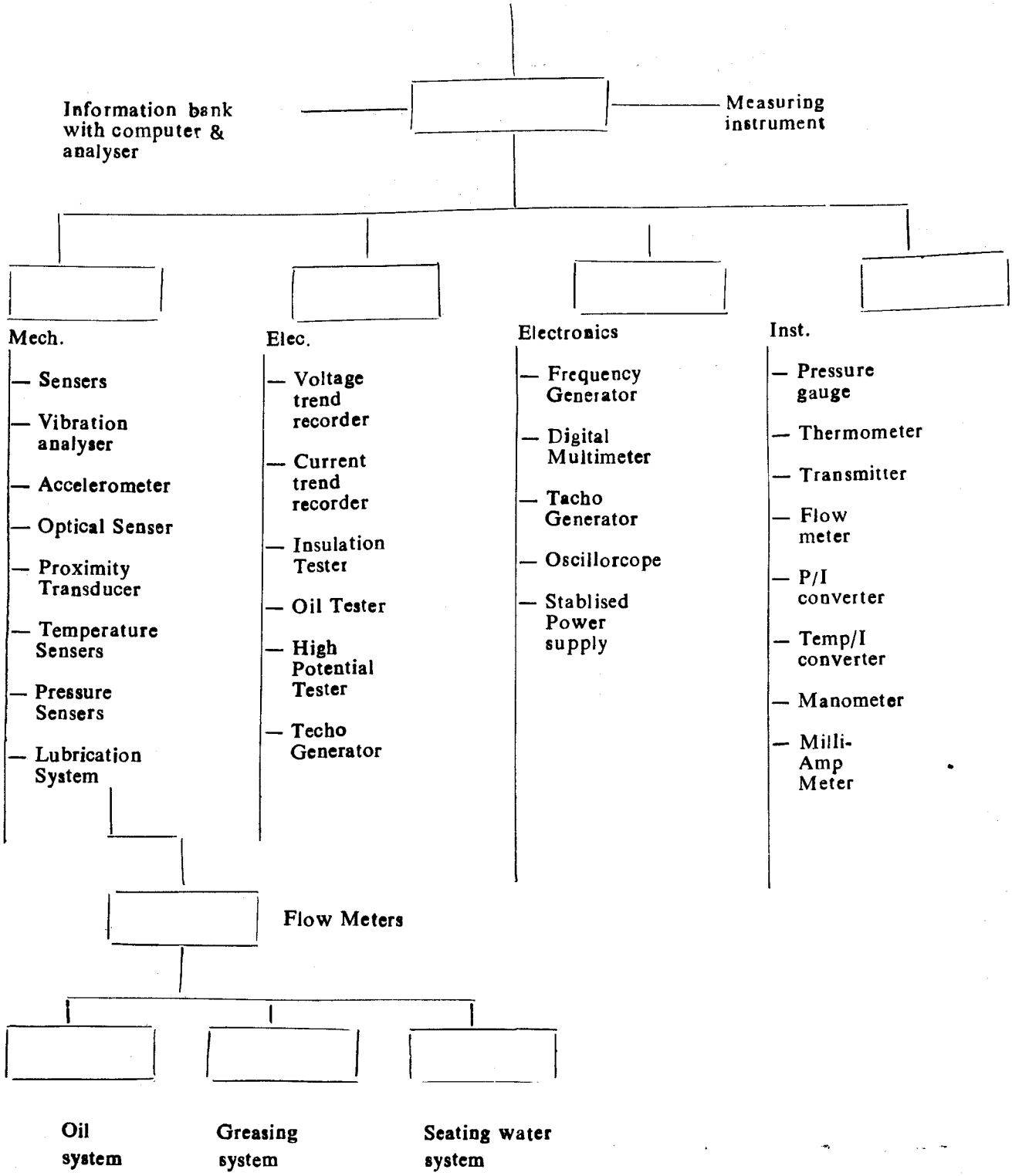

(A) Mechanical Equipment :

Almost all equipments are classified in different categories like—

a) Rotating equipment

b) Thermal vessel

c) Pressure parts

d) Special application equipment like compressors, vac. pumps and EOT Cranes etc.

a) Rotating equipment

There are various parameters which are recorded and compared with original suppliers datas/commissioning records viz.

i) Operating temp. and its trend

ii) Vibration level and its trend

iii) Noise level and its trend

iv) Operating performance like pressure, discharge, etc.

v) Power consumption pattern

Any major deviations from original values with variance in trend would give us a direct and reliable indication to plan preventive measures in right time so that premature/unscheduled outage of equipment could be avoided.

Instrument/apparatus needed for getting condition monitoring feedback from equipment are.

i) Thermometer/Thermo couples

ii) Hand held vibration monitoring device (Eccelerometer)

iii) Noise level measuring device

lv) Volt & current meters

v) Stroboscope/optical senser

vi) Viscosity measurement device

vii) Oil characteristic analyser

viii) Special alarm sensers indicating out of limit lubrication or sealing water flow.

xi) Pressure guages

xii) Level indicators

xiii) Vacuum guages

x) Oscilloscope.

b) Thermal vessels

Equipment under this category are paper drying cylinders, condensate tanks etc. Guiding factors to judge the efficient functioning of these units are determined by following methods :

i) Running load (steady or fluctuations)

ii) Vibration if any, are cyclic or random.

iii) Steam and condensate temperature

iv) Condensate level

v) Evacuation of condensate.

c) Pressure parts

Safety of equipment being linked with risk involved for operating crew, traditional system of scheduled maintenance are adhered to strictly. However before start up of these pressure vessels tests are conducted and recorded which becomes an indicator for assessing life of pressure parts. For fool proof and reliable operation of high pressure vessels more accurate instrumentation is used now.

d) Special application equipment like vac pumps and compressors are maintained based on specific power consumption by equipment. These equipment, even if running trouble free are taken out for maintenance based on usefulness for process operations and energy savings.

B) Electrical Equipment :

If mechanical equipment in process industries are considered as means to products, electrical system is the drive which makes equipment to run. These equipment although are considered as service department equipment, infact drives the system. The availability of electrical equipment is expected to be more than 95% hence needs perfect and periodical maintenance. There are basically three categories of equipments :

a) Static (Power) equipment

b) Rotating (Power) equipment

c) Electronic (Power) equipment

a) Static Equipment

With improved design and better metallurgy, reliability of equiment in electrical engineering has

improved. Equipment which are static in nature, if maintained properly can give throuble free service upto predetermined time.

Major equipment which are meant for transfer or control of power are transformers & switchgears. Transformers which has high efficiency of 99.6 has only one moving part i.e., TAP CHANGER. Standard parameters of main accessories along with cooling media and its electrical characteristics are compared. Any deviation from standard values are corrected. In the past only electrical conductors insulation value and dielectric strength of oil used in transformer were considered. However both these measurements give only a trend analysis. With latest laboratory equipment (even mobile units are available on request) actual condition of the component can be determined.

b) Switchgears

Switchgears which is like gate valves in electrical system, although simple in construction has critical roll to play for power transfer/conveying and control. It is expected to facilitate cut-off even under most severe fault condition in the system.

As switch gear bears the burden of load (electrical power) new techniques are adopted to ascertain their physical conditions to retain electrical characteristics i.e.

i) Insulation value with respect to other potential point and/or ground

ii) Temperature rise at joints

iii) Milli volts drops at mating joints]

iv) Tension check up for contact holding mechanisms.

Various tests on switchgear and transformer carried out as maintenance checks.

1. Engineering inspection check list for switchgears, circuit breaker.

   i) Compare equipment name plate with designed mill power distribution diagram.

   ii) Inspect equipment location for unfavourable environmental conditions.

   iii) Check inter locks.

   iv) Check positioing of breaker, racking mechanism

   v) Check instruments, meters relays etc.

   vi) Check cracked insulators, oil level, temperature, relay flags.

   vii) Record all datas for preventive maintenance schedule.

Transformer appraisal guidelines.

i) Oil level

ii) Oil Temp.

iii) Winding temp.

iv) Breather colour

v) Winding resistance

vi) Winding insulation value

vii) Oil tests as below

Dielectric strength

Interfacial tension

Tan delta

Acidity

Flash point

Water content

Sludge content.

(Refer charts 4 & 5)

CHART—4

Test	Equ. Voltage	Method	Limit
1. Electric Strength KV (Min)	>145 KV >72.5 KV <145 KV <72 5 KV	IS 6792 — 1972 IS 335	50 40 30 25
2. Water content ppm (Max)	>145 KV <145 KV	— 1983	35
3. Specific resistance E12 ohmcm(min)	All Voltages —	IS 6103 — 1971	2 0 2 @ 90 C
4. Dielectric dissipation factor (Max)	>145 KV <145 KV	IS 6262 — 1971	0.2 1.0 @ 90 C
5. Neutralisation value (Max) mg koh/gm	All Voltages	IS 1448 — 1967	0.5
6. Sediment & or precipitable sludge	All Voltages		Nil

7.	Flash point Deg C (Min)	All Voltages	IS 1448 — 1970	125
8.	Interfacial tension N/m (Min)	All Voltages	IS 6104 — 1971	0.018
9.	Dissolved gas analysis	>145 KV	IS 9434 — 1979	IS 10593 — 1983

Remarks :

If the values are beyond the limits the oil is to be reconditioned/replaced. If more than one test indicate this replace the oil, otherwise reclaim/recondition by filtering.

CHART—5

Permissible Concentrations of Dissolved Gases in the Oil of a Healthy Transformer

GAS	SYMBOL	YEAR OF SERVICE > 10 YEARS (Gas quantities are in ppm)
Methane	CH_4	200—300
Ethane	C_2H_6	800—1000
Ethylene	C_2H_4	200—400
Acetylene	C_2H_2	100—150
Hydrogen	H_2	200—300
Carbondioxide	CO_2	9000—12000
Carbonmonoxide	CO	600—700

C) Rotating equipment :

Although Electrical rotating machines are categorised among electrical equipment, on the basis of construction, it is looked & maintained more as mechanical. Should it be a power generating machine or power consuming motors, monitoring parameters for roating parts are the same. However standards for allowing machine to run are different and are classified based on ratings & speeds. Most common monitoring parameters on rotating machine are as below :

i) Vibration level

ii) Noise level

iii) Temperature rise

iv) Current/Voltage stability

v) Insulation level

vi) No load losses

vii) Load and capacity factor

(Refer drgs 4a, 4b, 4c, 4d, & 4e)

Electronics :

Controlled behaviour of electricity through power electronics and by electronic controllers has already made the task of chemical and mechanical engineers much simpler, as most of the chemical/mechanical operations can be pre-determined and accurately controlled. As mathematical operations of mechanical movement and chemical behaviour datas are possible to compute and process, electronics has brought revolutionary growth in industrial performances. Incidentally when electronic equipment gives fantastic services to other engineering operation, it also automatically gives trend indications of the system by virtue of feed back information system incorporated in it.

Frequency spectrum of a 3600-rpm motor over a 500-Hz range

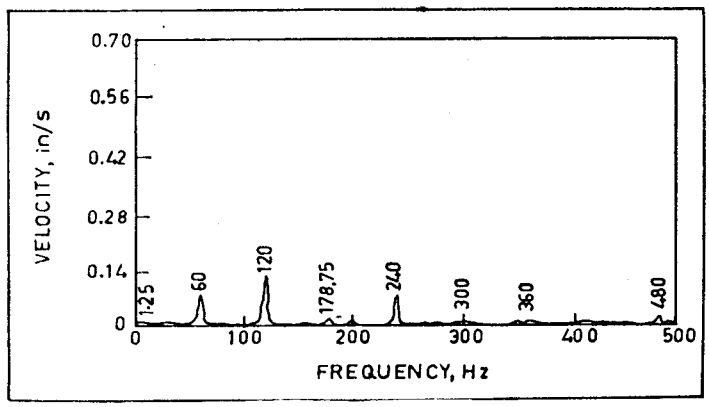

Frequency spectrum of the 120 Hz harmonic dopictod in Fig. This 20 Hz window is provided by a zoom feature that enhances resolution.

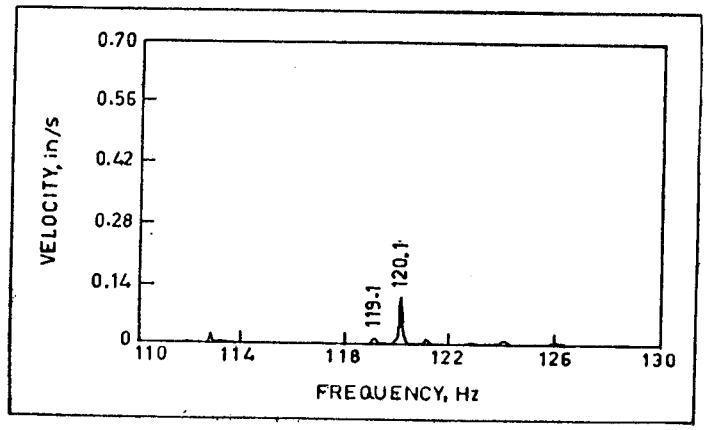

Drg. 4a

) Frequency response curves for velocity, displacement and acceleration. Curves were plotted for a constant vibration level of 0.15 in/s.

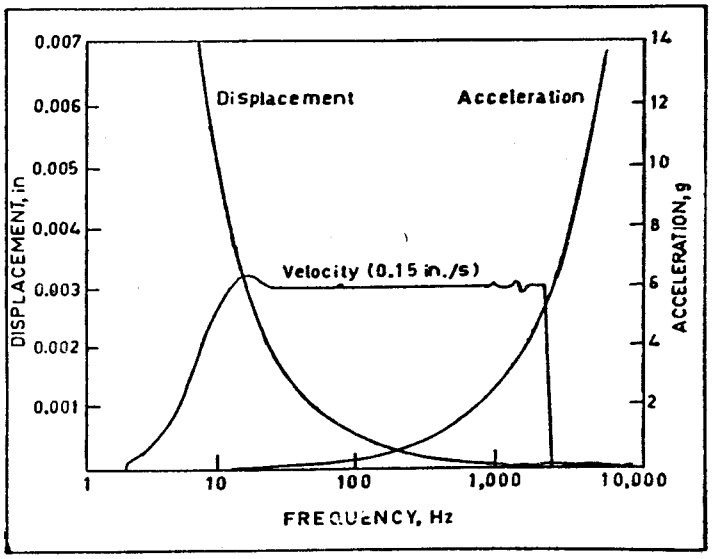

Drg 4b

Random pattern : varying time period between speed disturbances.

Example of Random pattern :

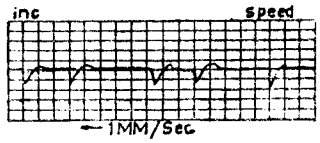

Cyclic pattern : Constant time period between speed disturbances.

Example of cyclic pattern :

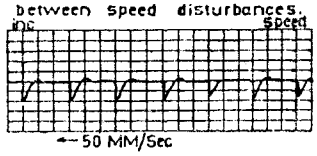

Example :

Same direction disturbances

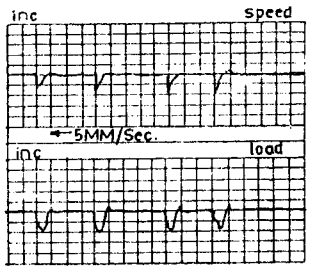

Example :

Opposite direction disturbances.

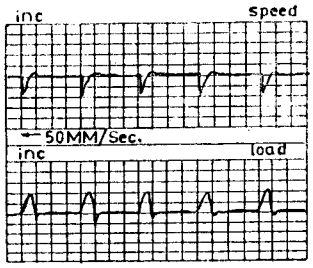

Drg. 4c

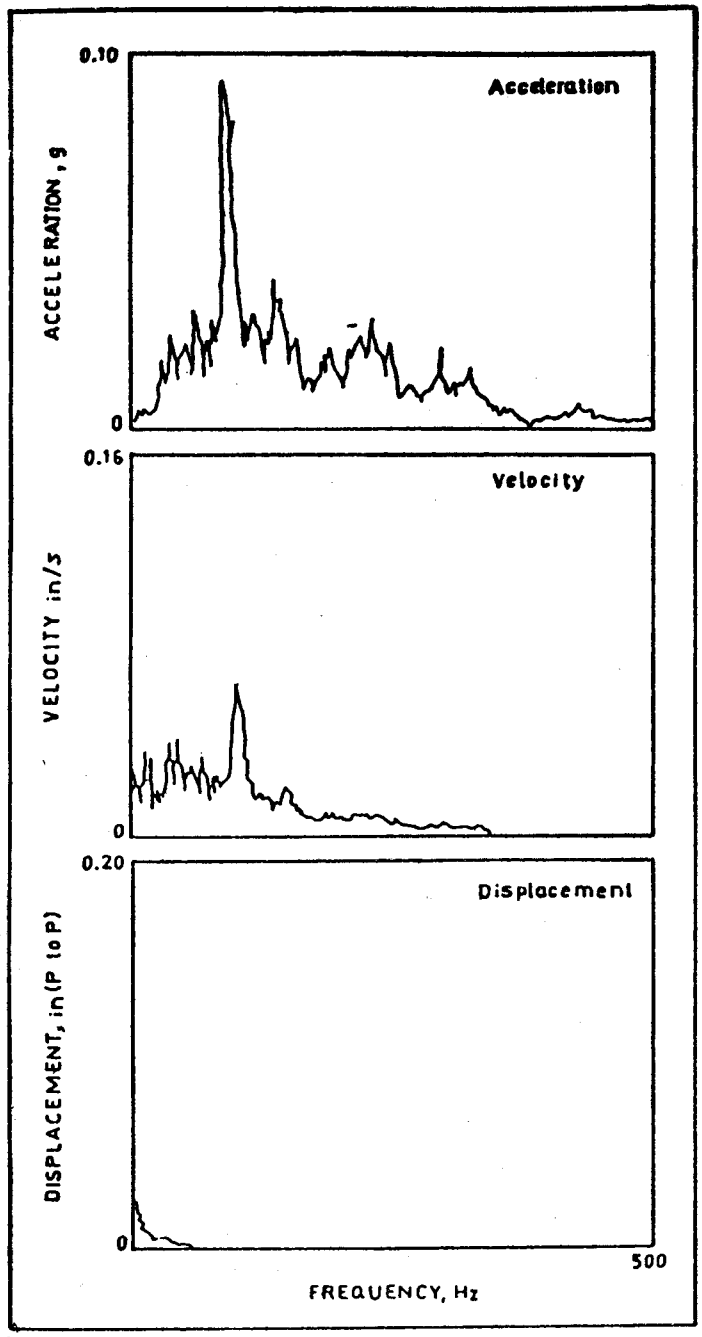

Drg 4d

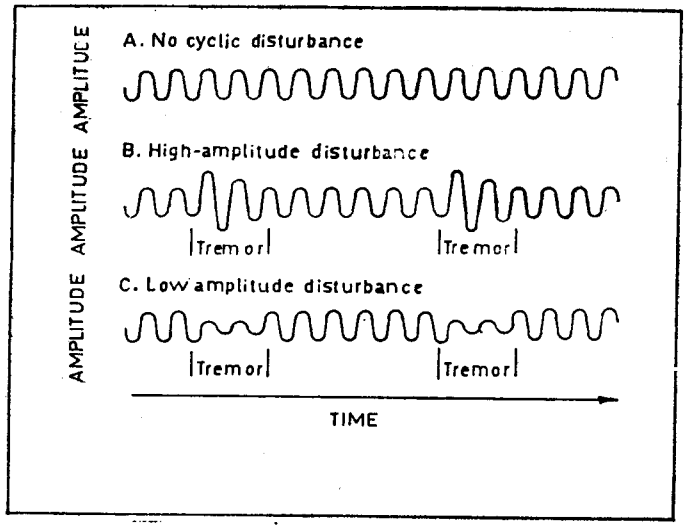

Frequency spectra before and after lubrication of a bearing.

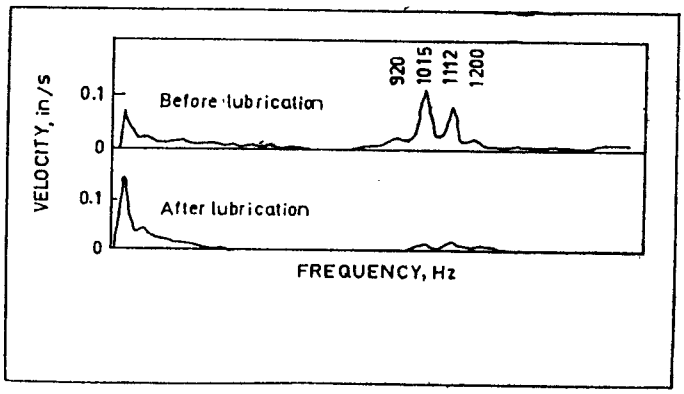

Drg. 4e

Software of controller has built in self health diagnosis system, indicates/predicts variance and hence calls for preventive measures.

The friendly versatile instrument oscillocope, when used to check power part of equipment, it displays current, speed, voltage trend and their behaviour under various operating conditions.

Instrumentation and Control :

With stiff competition among paper manufacturer, more thrust is being given to quality without loss of production. For steady production of quality product, dependantability on instrumentation has become the key for success with instroduction of sophisticated instrumentation and control, fool proof logic controllers have become the operator of equipment and plant personnel as a supervisor to it.

Hitherto only pneumatic and hydraulic media were used for process controls. With the introduction of electronics devices and computers, use of pneumatic and hydraulic system have limited use. For maintaining instrumentation perfectly, fine tuning of instrument controller, its basic function to follow process parameters for desired results and repeatability is a must. Each instrument can be tested seperately for its accuracy, linearity, repeatability as per designed from their loops.

Instruments can be maintained better only if process engineer understand and uses it with utmost care. It is normally system disturbances and foreign materials which corrupts senser/stirrer/transmitters fitted in pipe line or chest ect. If behaviour of signals displayed by senser and corrector are understood by differentiating 'CAUSE' and "AFTER EFFECT" instrument maintenance can be carried out most efficiently at routine/intermittent period.

Use of computer in mill wide maintenance :

Increased use of computer as a maintenance tool is being felt in almost all large pulp and paper mills. However an effective computer maintenance system shall be dependant upon close co-ordination of various support departments. A good system will include following system :

i) Equipment records including manufacturer's information.
ii) Equipment repair history
iii) Repair part list.
iv) Process information
v) Man Power data records
vi) Predictive and preventive maintenance system
vii) Appropriate technology.
viii) Capable equipment
ix) Skilled and dedicated personnel.

Conclusion :

An accurate predictive maintenance programme consists of computer technology, hardware, soft ware and personnel. The right combination and amount of these items can yield unbelievable dividents.

It is very important that all mill people fully understand the purpose of new maintenance schedule and prccedure system and its limitation too Computer aided technique although new and one of the best is not the ultimate answer to the mill problems As with any tool, where ever system designed are made friendly the users have realised that the task of maintenance and its reliability has become more simple and trustworthy.